US010466411B2

(12) **United States Patent**
**Conrad**

(10) **Patent No.: US 10,466,411 B2**
(45) **Date of Patent: Nov. 5, 2019**

(54) **LED LIGHT SOURCE**

(71) Applicant: **Omachron Intellectual Property Inc.**, Hampton (CA)

(72) Inventor: **Wayne Ernest Conrad**, Hampton (CA)

(73) Assignee: **Omachron Intellectual Property Inc.**, Hampton, Ontario (CA)

( * ) Notice: Subject to any disclaimer, the term of this patent is extended or adjusted under 35 U.S.C. 154(b) by 253 days.

(21) Appl. No.: **15/491,167**

(22) Filed: **Apr. 19, 2017**

(65) **Prior Publication Data**

US 2018/0306971 A1 Oct. 25, 2018

(51) **Int. Cl.**
***F21V 8/00*** (2006.01)
***F21V 33/00*** (2006.01)
(Continued)

(52) **U.S. Cl.**
CPC ..... ***G02B 6/0091*** (2013.01); ***A47B 96/02*** (2013.01); ***A47F 3/001*** (2013.01); ***F21K 9/232*** (2016.08); ***F21K 9/61*** (2016.08); ***F21S 9/02*** (2013.01); ***F21V 19/0045*** (2013.01); ***F21V 19/04*** (2013.01); ***F21V 21/0824*** (2013.01); ***F21V 23/0471*** (2013.01); ***F21V 33/0012*** (2013.01); ***F21V 33/0032*** (2013.01); ***G02B 6/009*** (2013.01); ***G02B 6/0015*** (2013.01); ***G02B 6/0035*** (2013.01); ***G02B 6/0051*** (2013.01); ***G02B 6/0075*** (2013.01); ***G02B 6/0078*** (2013.01); ***G02B 6/0083*** (2013.01); ***G02B 6/0085*** (2013.01); ***G02B 6/0088*** (2013.01);
(Continued)

(58) **Field of Classification Search**
CPC ..... F21Y 2115/10; F21Y 2103/10; G02B 6/0091; G02B 6/0035; G02B 6/0075; F21K 9/61; F21V 33/0032; F21W 2131/304; A47G 1/0622; G09F 13/04; G09F 2013/049
See application file for complete search history.

(56) **References Cited**

U.S. PATENT DOCUMENTS

5,432,684 A 7/1995 Fye et al.
5,796,450 A 8/1998 Kanda et al.
(Continued)

FOREIGN PATENT DOCUMENTS

CN 205806990 U 12/2016
CN 106382514 A 2/2017
(Continued)

OTHER PUBLICATIONS

Abstract—English machine translation retrieved from TotalPatent; JP2015118899.
(Continued)

*Primary Examiner* — Peggy A Neils
(74) *Attorney, Agent, or Firm* — Philip C. Mendes da Costa; Bereskin & Parr LLP/S.E.N.C.R.L., s.r.l.

(57) **ABSTRACT**

A LED light source includes a longitudinally extending light guide having a longitudinally extending light emitting face having a length, a first end face and a longitudinally spaced apart second end face. A LED light source is provided at least at the first end face. The light emitting face has a plurality of light emitting locations provided thereon. The density of the light emitting locations increases from the first end face towards the second end face.

**6 Claims, 152 Drawing Sheets**

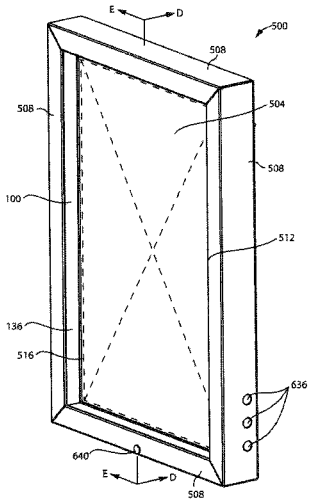

(51) **Int. Cl.**

| | |
|---|---|
| ***F21V 19/00*** | (2006.01) |
| ***F21V 19/04*** | (2006.01) |
| ***F21V 21/08*** | (2006.01) |
| ***F21K 9/232*** | (2016.01) |
| ***F21K 9/61*** | (2016.01) |
| ***F21S 9/02*** | (2006.01) |
| ***F21V 23/04*** | (2006.01) |
| ***A47F 3/00*** | (2006.01) |
| ***A47B 96/02*** | (2006.01) |
| ***F21Y 115/10*** | (2016.01) |
| ***F21Y 103/10*** | (2016.01) |
| ***F21Y 107/90*** | (2016.01) |

(52) **U.S. Cl.**
CPC ... *A47B 2220/0077* (2013.01); *F21Y 2103/10* (2016.08); *F21Y 2107/90* (2016.08); *F21Y 2115/10* (2016.08)

(56) **References Cited**

U.S. PATENT DOCUMENTS

| | | | | |
|---|---|---|---|---|
| 7,108,416 | B1 * | 9/2006 | Osawa | G02B 6/0038 362/600 |
| 7,140,743 | B2 | 11/2006 | Yang | |
| 7,306,357 | B2 * | 12/2007 | Han | G02B 6/0028 362/610 |
| 7,431,493 | B2 * | 10/2008 | Lee | G02B 6/0036 349/64 |
| 7,627,969 | B2 * | 12/2009 | Ericson | G07F 17/3211 40/541 |
| 7,942,542 | B1 * | 5/2011 | Dunn | G09F 13/16 362/604 |
| 8,177,409 | B2 | 5/2012 | Ohta et al. | |
| 8,997,387 | B2 | 4/2015 | Oki | |
| 9,375,103 | B1 * | 6/2016 | Hoppaugh | A47G 1/0622 |
| 9,393,900 | B2 * | 7/2016 | Held | B60Q 1/26 |
| 2008/0106892 | A1 | 5/2008 | Griffiths et al. | |
| 2009/0067194 | A1 * | 3/2009 | Sanchez | G02B 6/0043 362/618 |
| 2012/0262089 | A1 | 10/2012 | Lo et al. | |
| 2013/0077344 | A1 | 3/2013 | Kokubu et al. | |
| 2014/0001956 | A1 | 1/2014 | Ter Weeme et al. | |
| 2014/0268874 | A1 | 9/2014 | Clements | |
| 2014/0376267 | A1 | 12/2014 | Myers et al. | |
| 2015/0247612 | A1 | 9/2015 | Zhang et al. | |
| 2015/0309248 | A1 | 10/2015 | Xu | |
| 2017/0150832 | A1 * | 6/2017 | Lu | A47G 1/0622 |
| 2018/0314001 | A1 * | 11/2018 | Veenstra | G09F 13/04 |

FOREIGN PATENT DOCUMENTS

| | | | |
|---|---|---|---|
| JP | 08-160892 | A | 6/1996 |
| JP | 2009047909 | A | 3/2009 |
| JP | 2013068718 | A | 4/2013 |
| JP | 2015118899 | A | 6/2015 |
| JP | 5752893 | B2 | 7/2015 |
| KR | 101759051 | B1 | 7/2017 |

OTHER PUBLICATIONS

Abstract—English machine translation retrieved from TotalPatent; JP2013068718.

Abstract—English machine translation retrieved from TotalPatent; JP2009047909.

Abstract—English machine translation retrieved from TotalPatent; JP5752893.

Abstract—English machine translation retrieved from TotalPatent; JP08-160892.

International Search Report received in connection to co-pending international patent application PCT/CA2018/050434, dated Jul. 6, 2018.

English machine translation of CN205806990, published on Dec. 14, 2016.

English machine translation of CN106382514, published on Feb. 8, 2017.

English machine translation of KR101759051, published on Jul. 18, 2017.

* cited by examiner

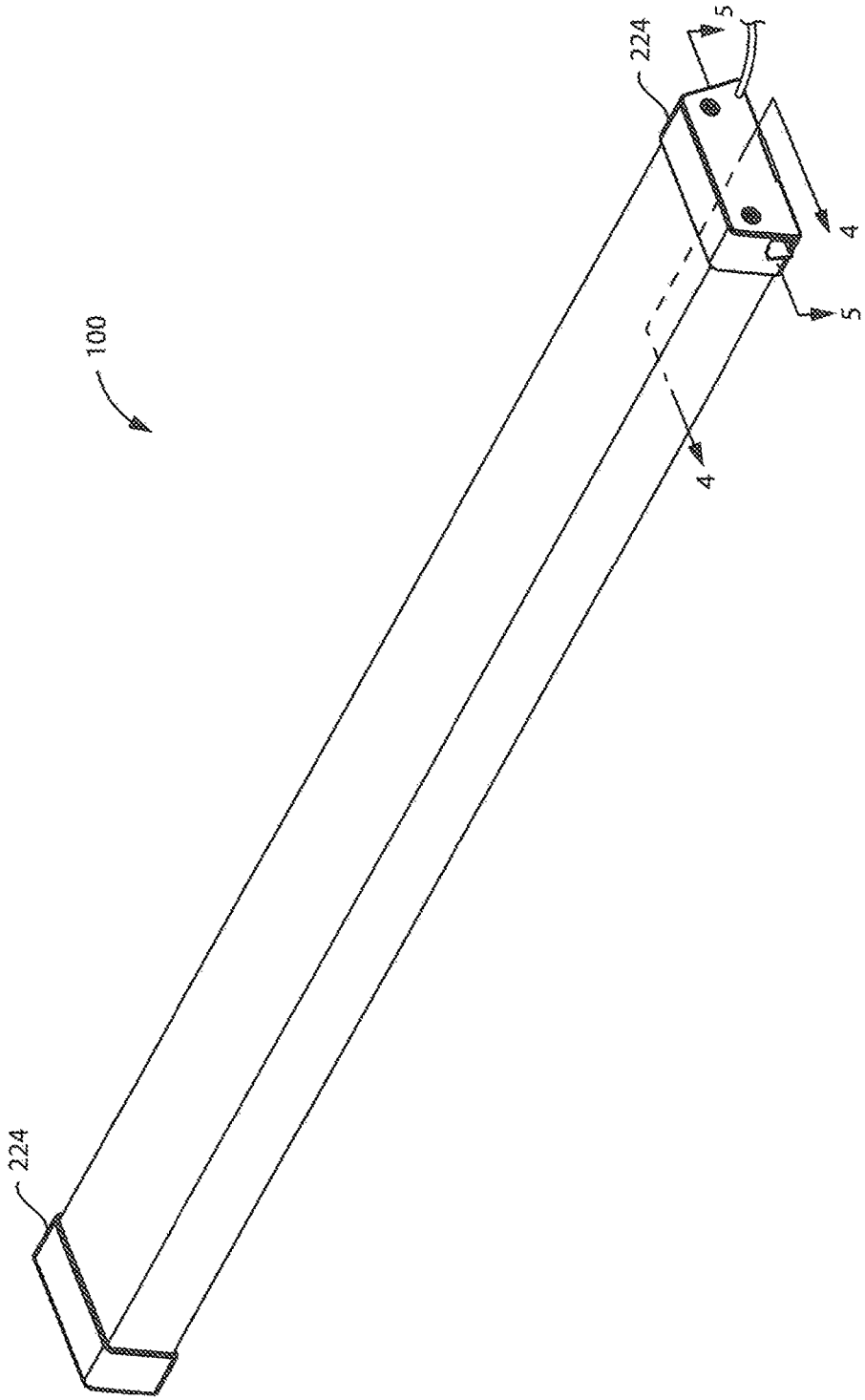


FIG. 1

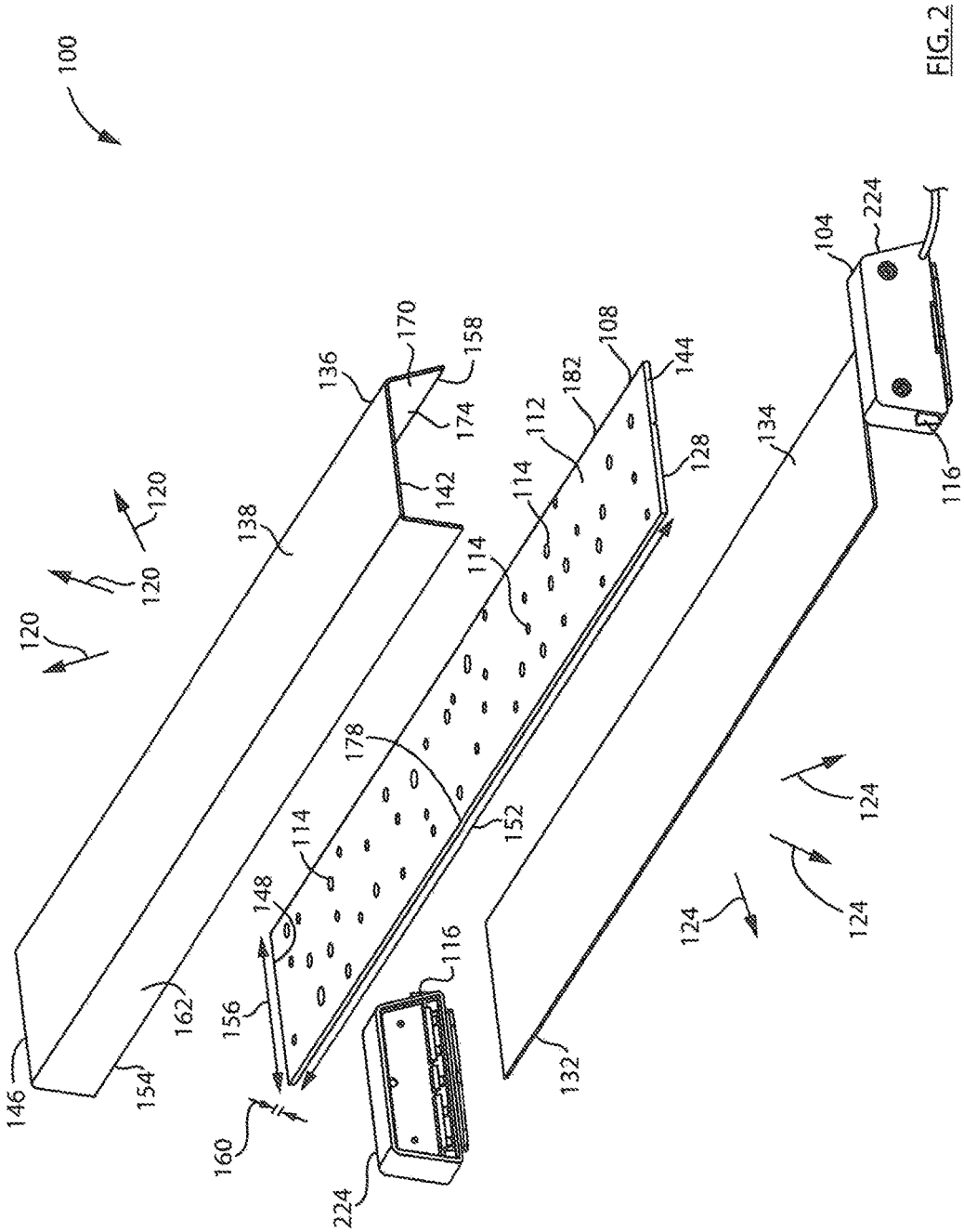
100
104
224
116
134
108
144
182
112
128
114
114
136
170
158
174
142
138
120
120
120
178
152
114
148
156
162
146
154
160
224
116
132
124
124
124

FIG. 2

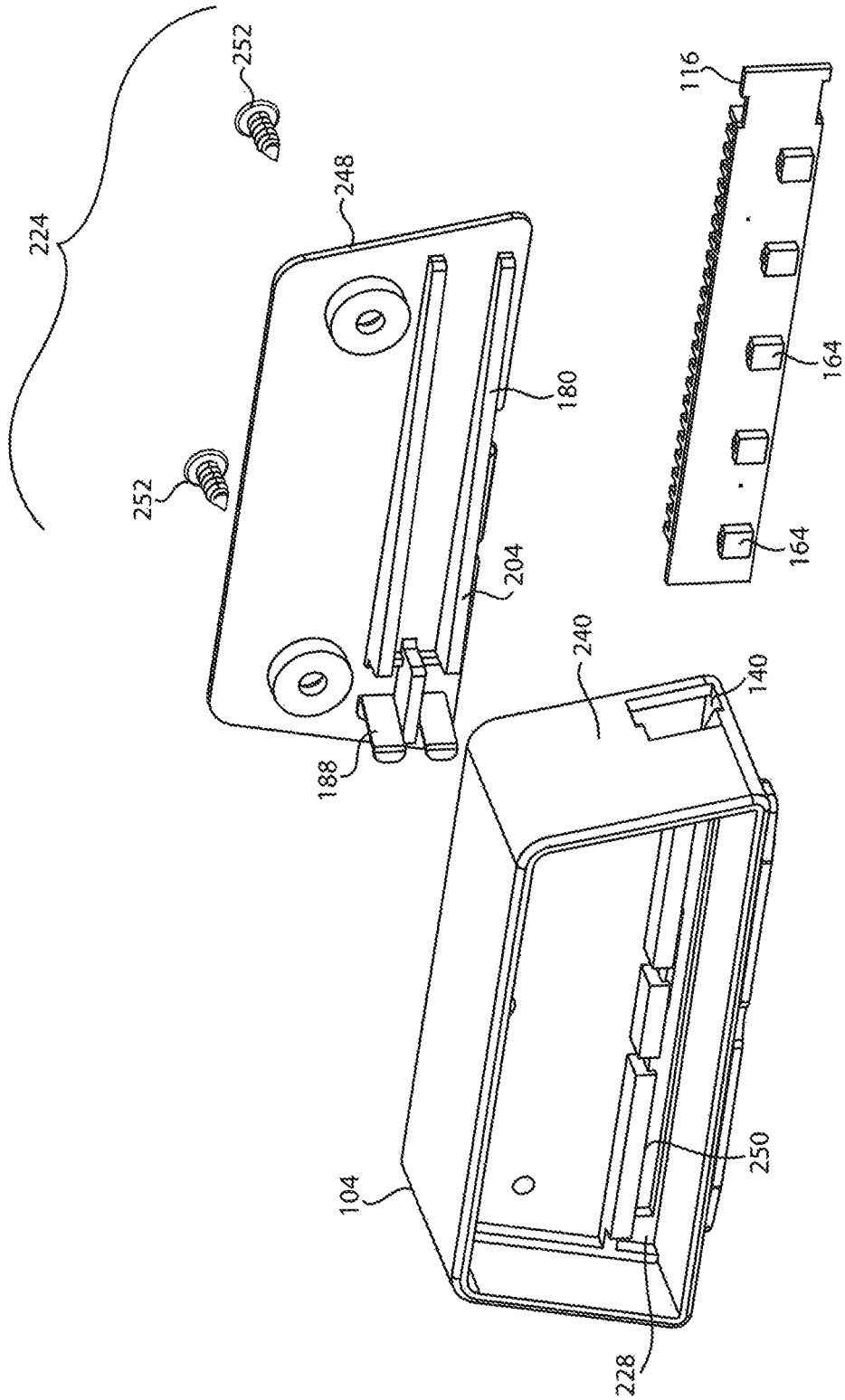


FIG. 3

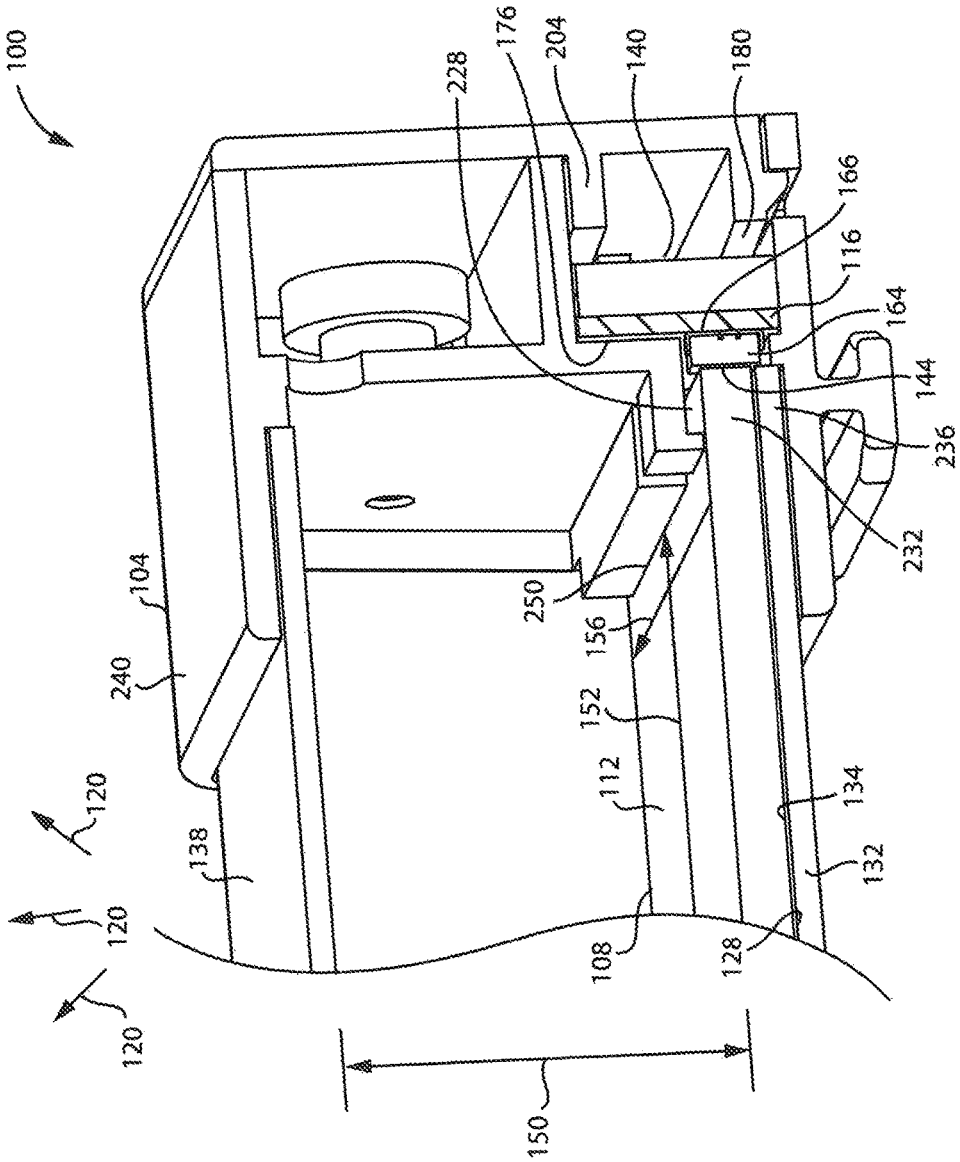
100
228
176
204
140
180
166
116
164
144
236
232
250
156
152
112
108
128
134
132
104
240
138
120
120
120
150

FIG. 4

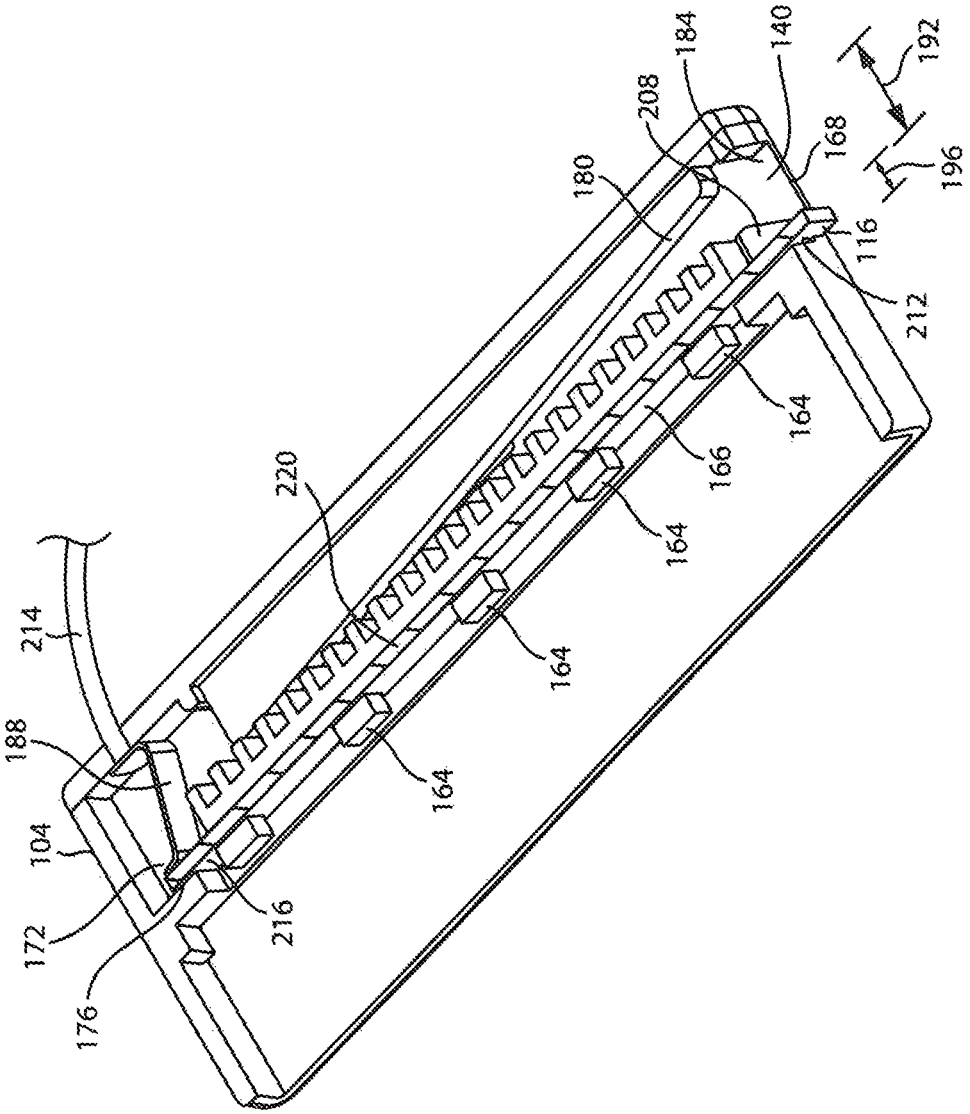
214
188
104
172
176
216
220
164
164
164
164
166
180
208
184
140
168
116
212
192
196

FIG. 5

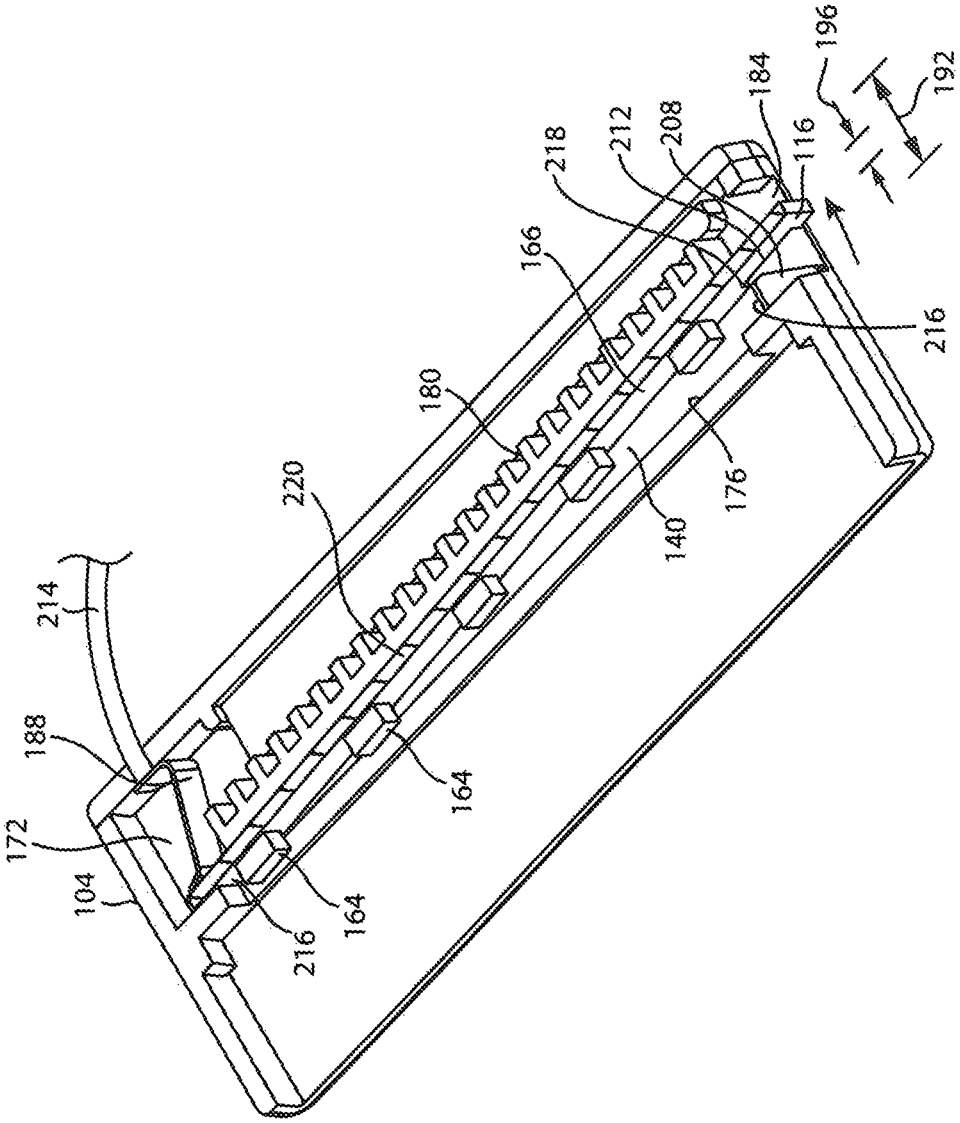
214
188
172
104
220
180
166
218
212
208
184
116
196
192
216
164
164
216
140
176

FIG. 6

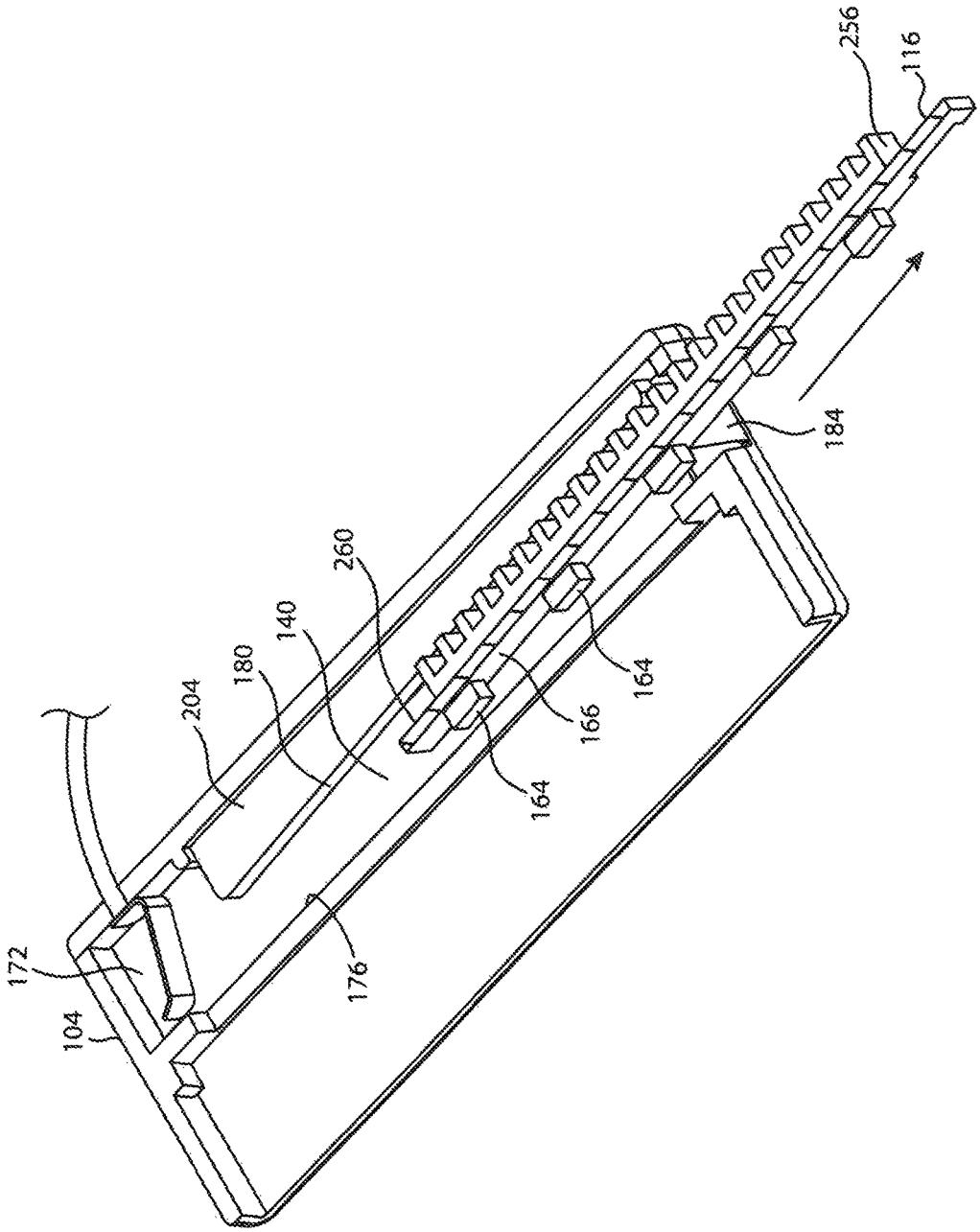


FIG. 7

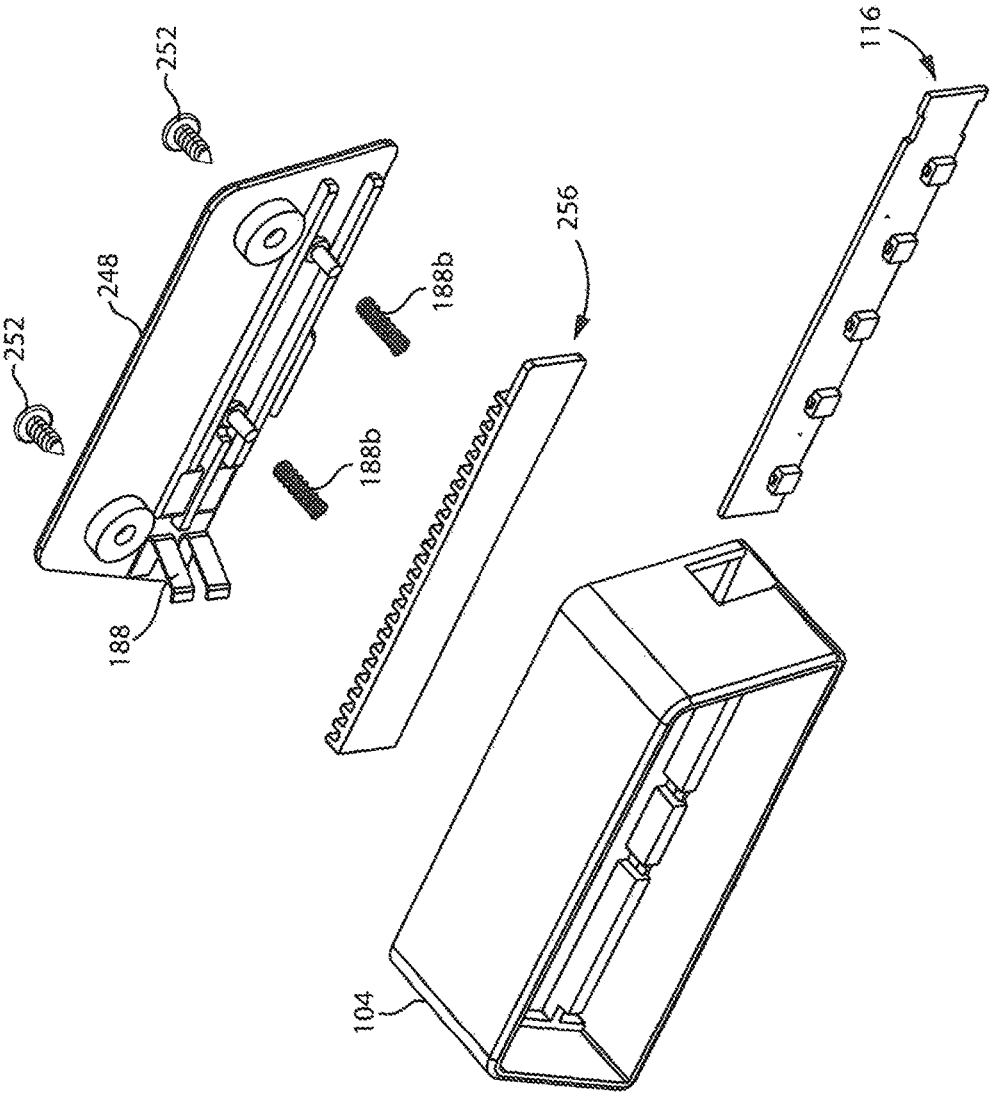


FIG. 8

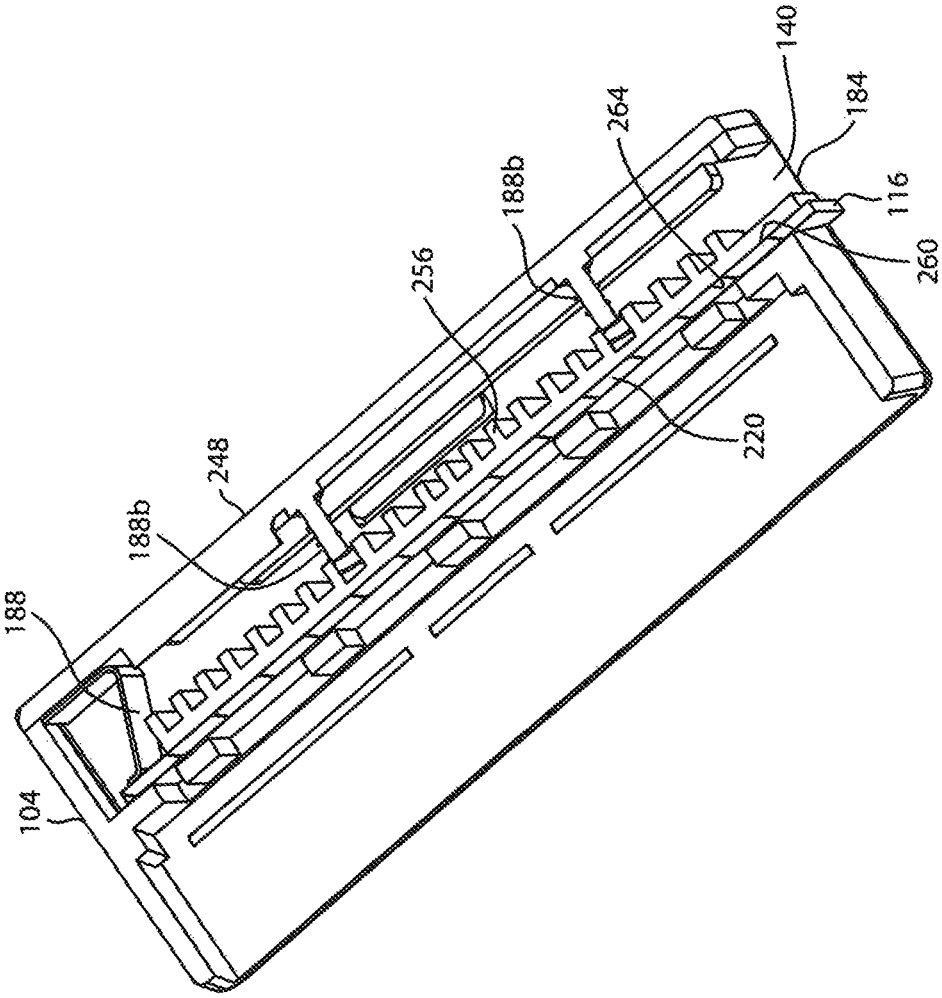


FIG. 9

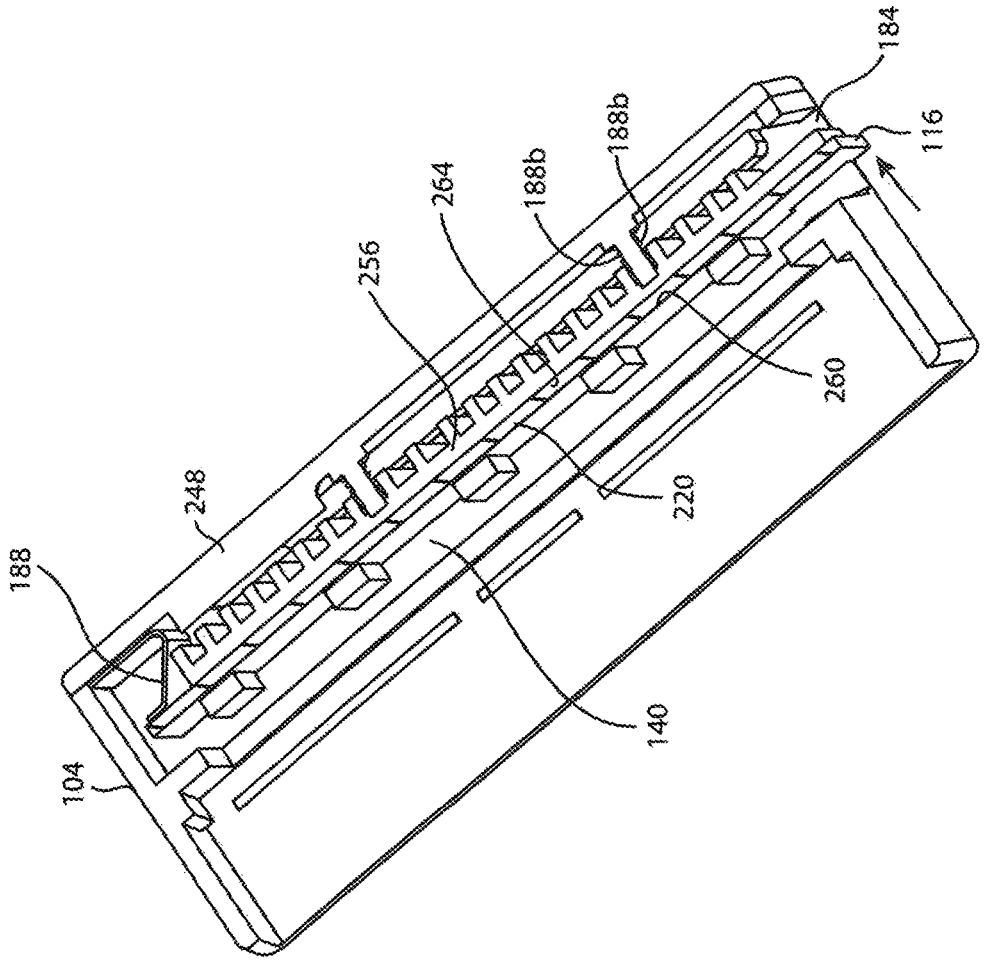


FIG. 10

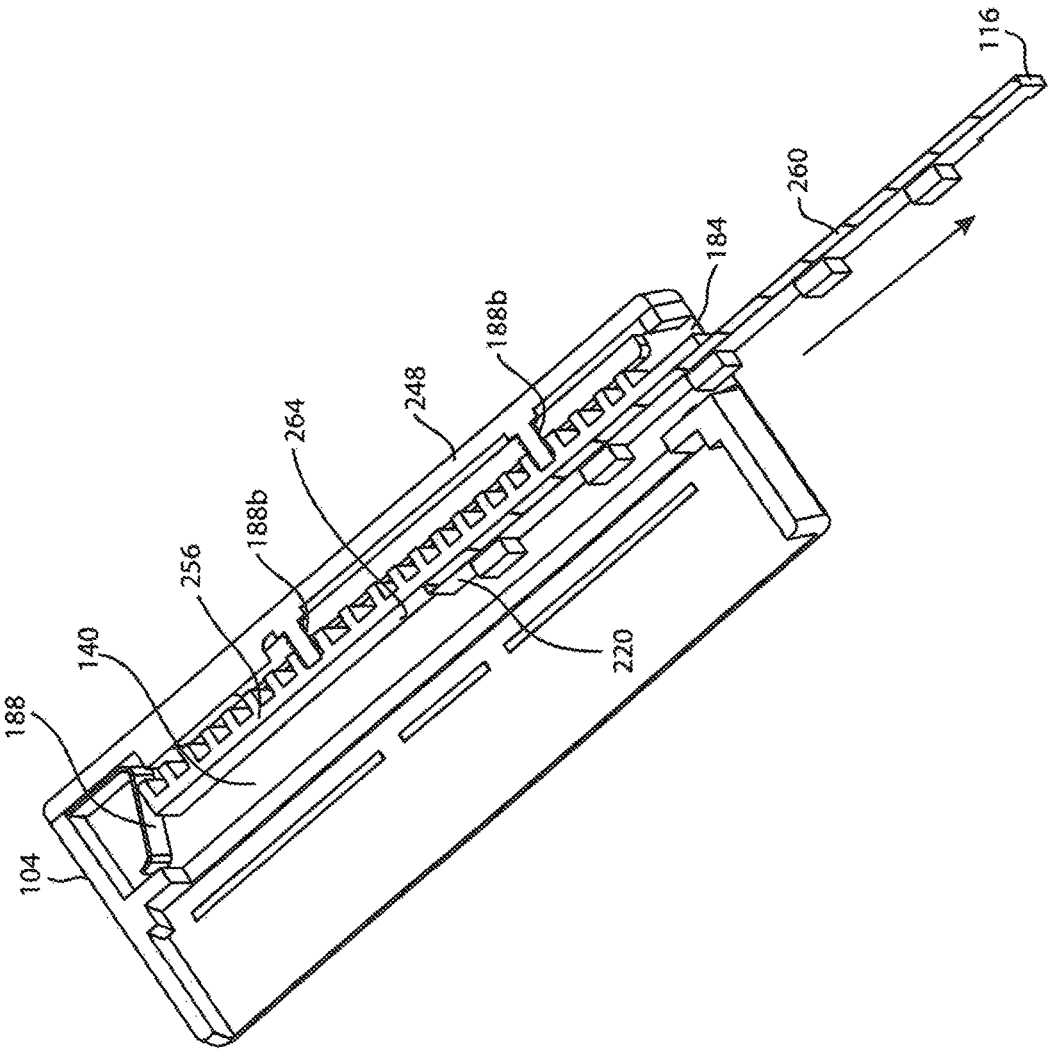


FIG. 11

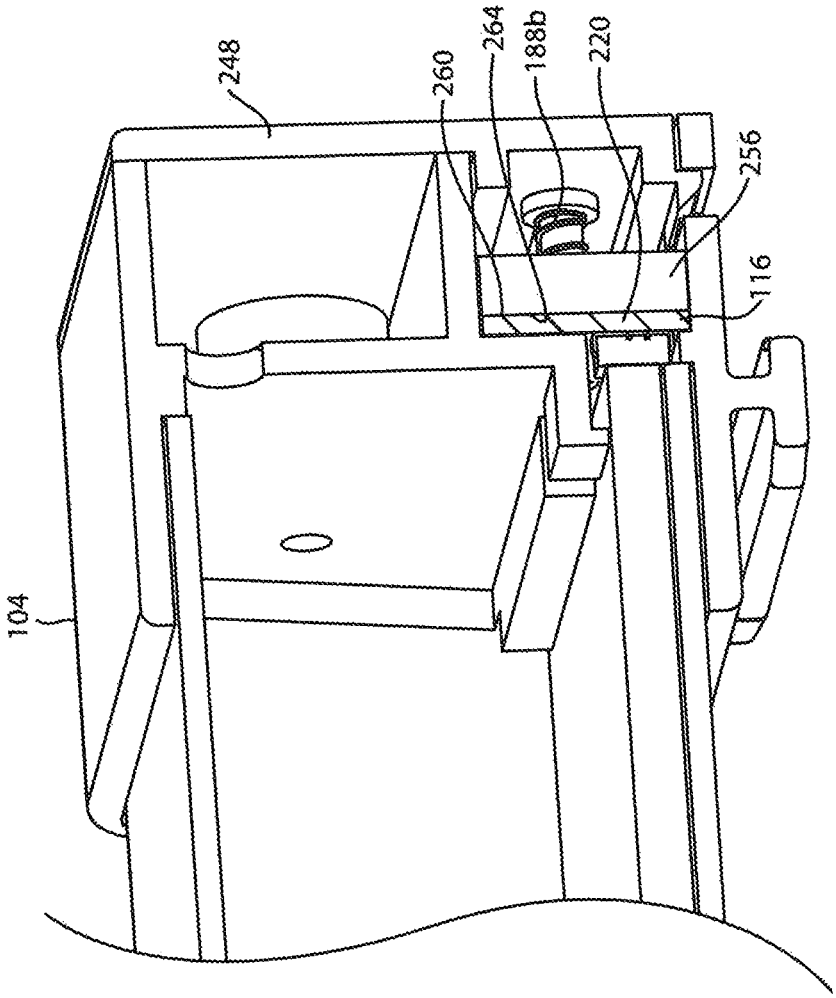


FIG. 12

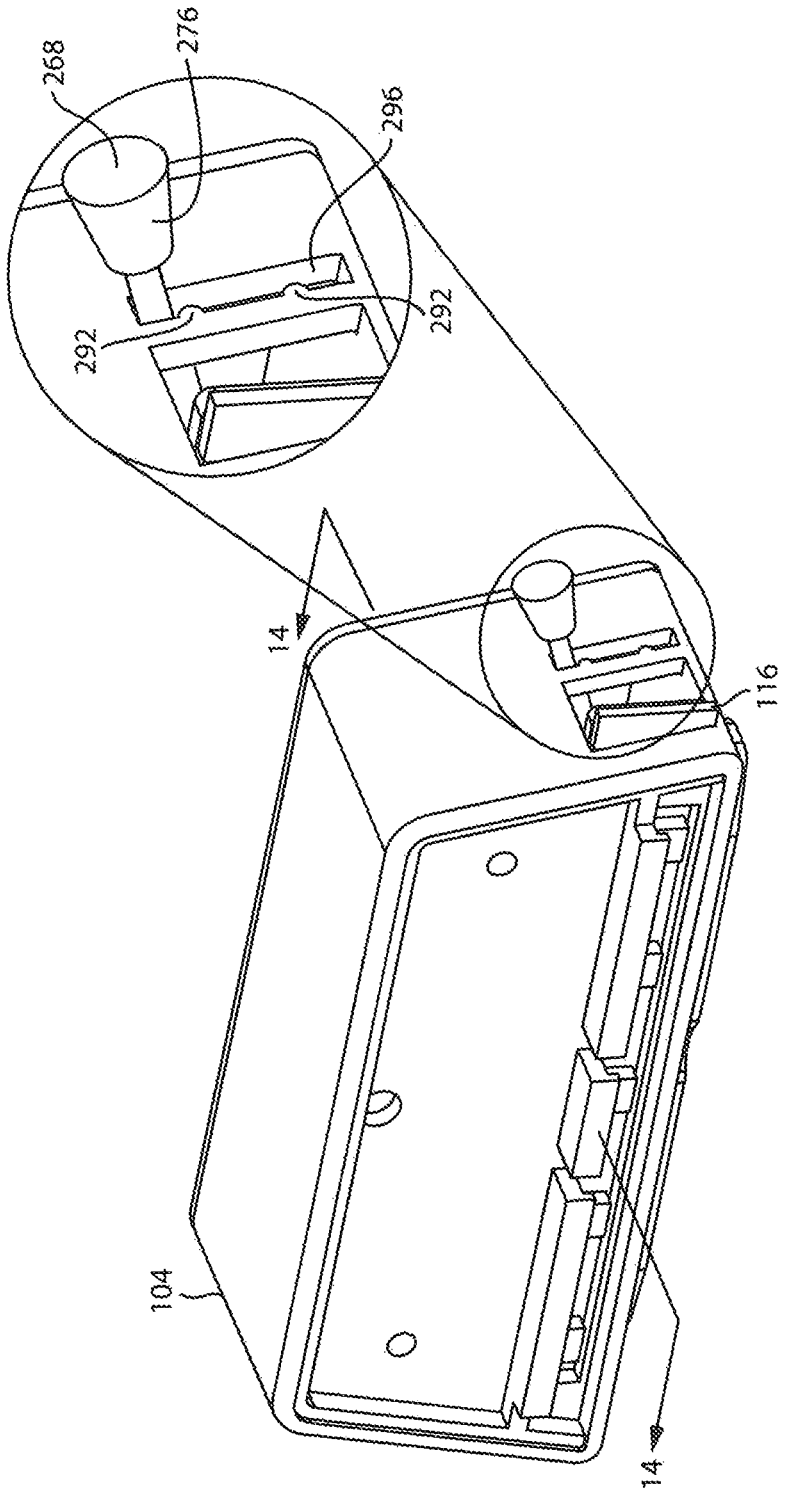


FIG. 13 A

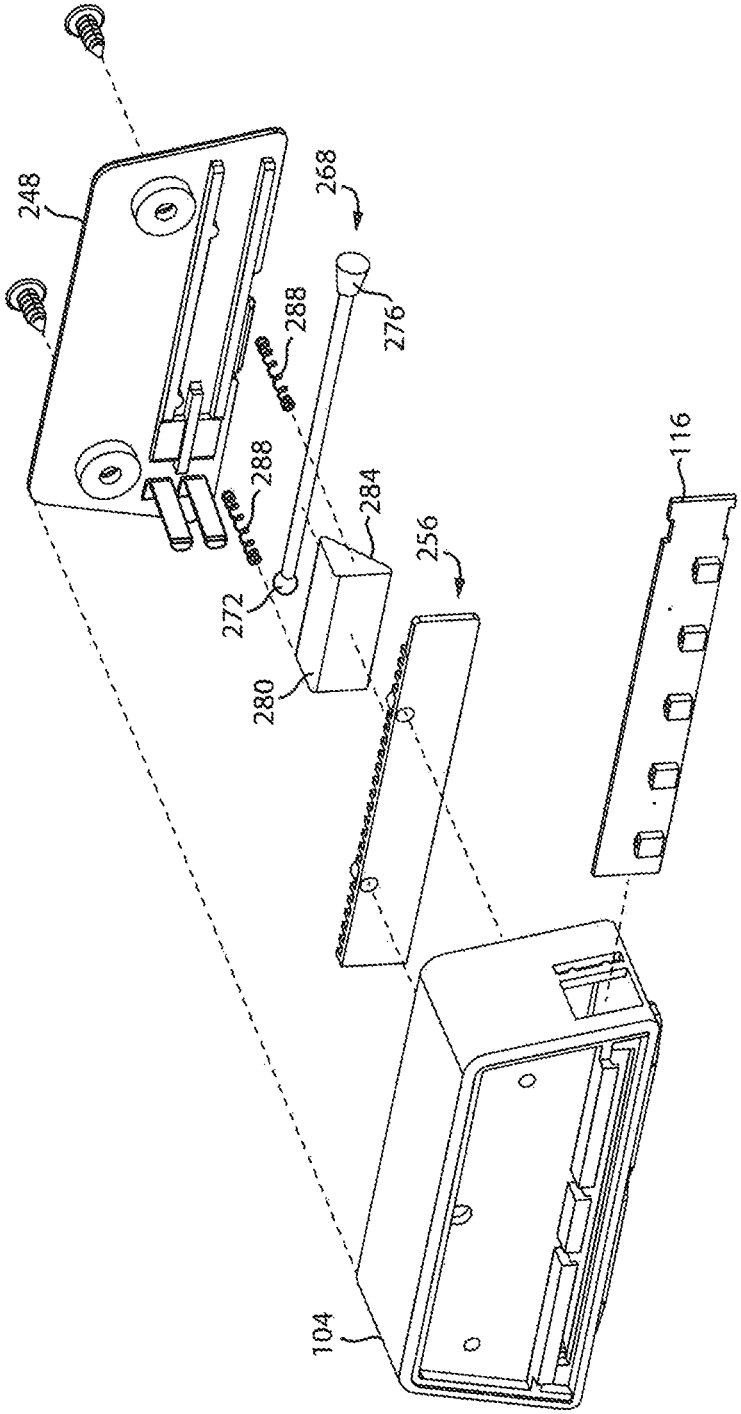


FIG. 13B

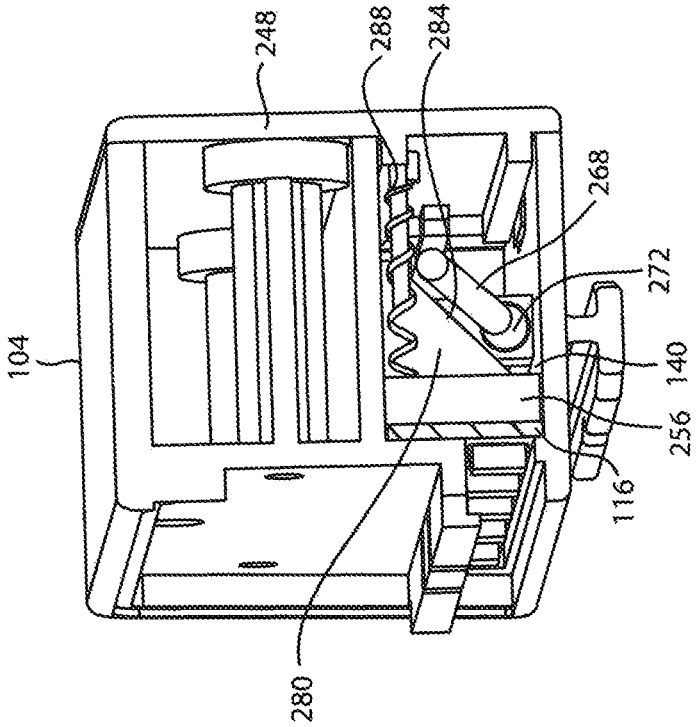


FIG. 14

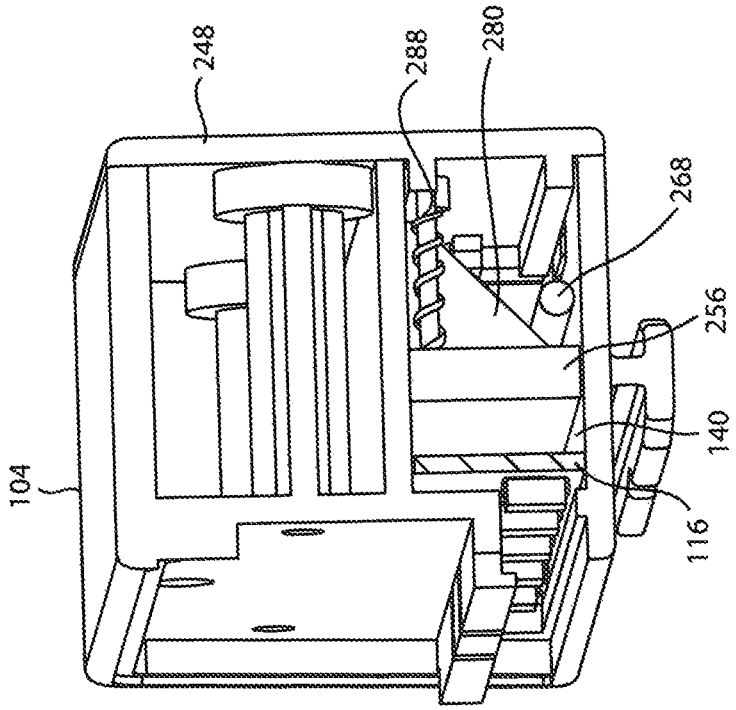


FIG. 15

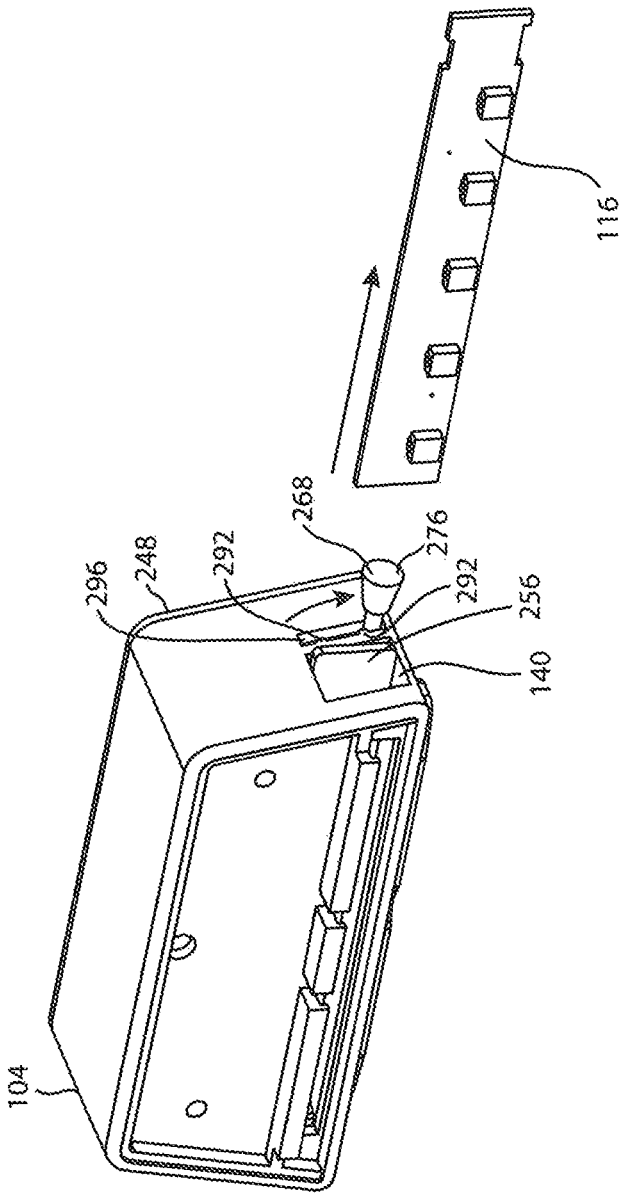


FIG. 16

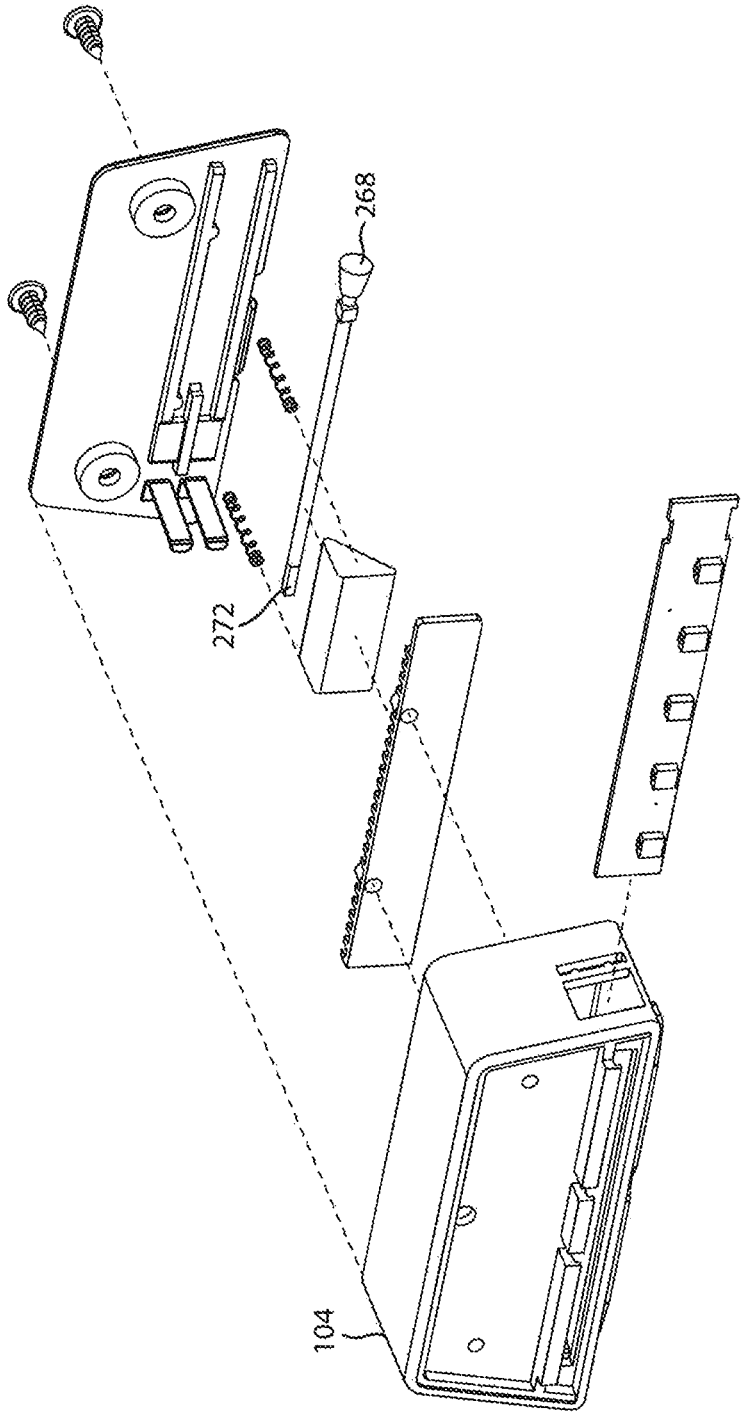


FIG. 17

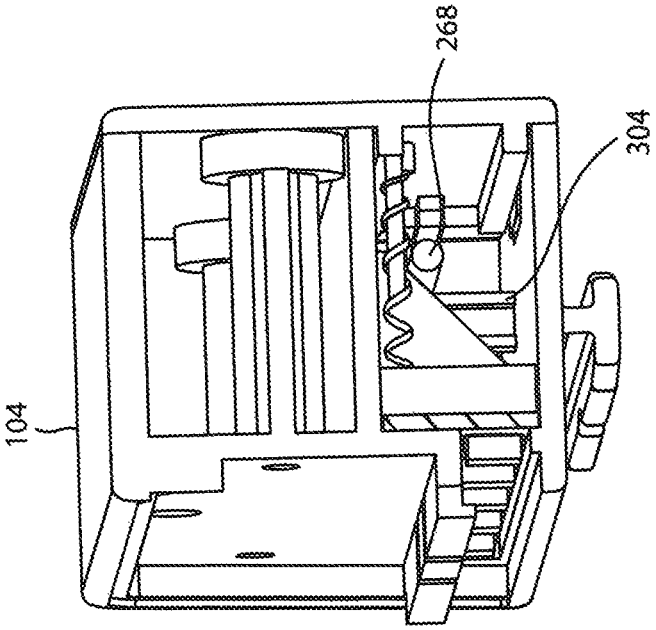


FIG. 18

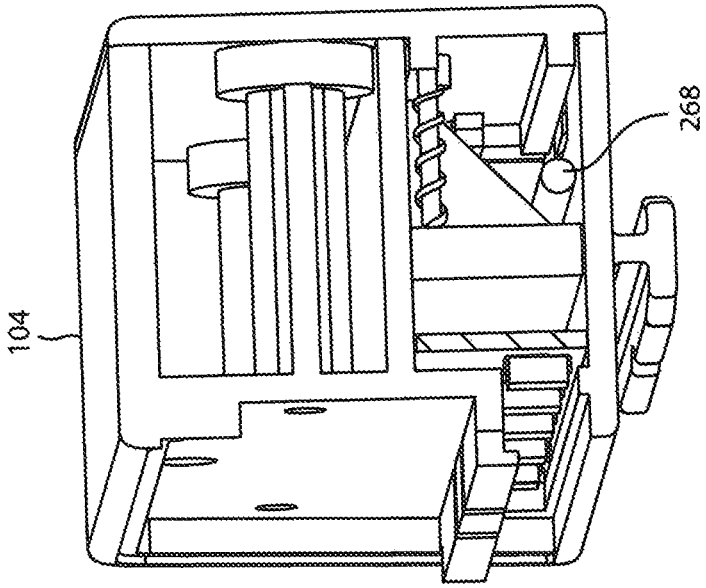


FIG. 19

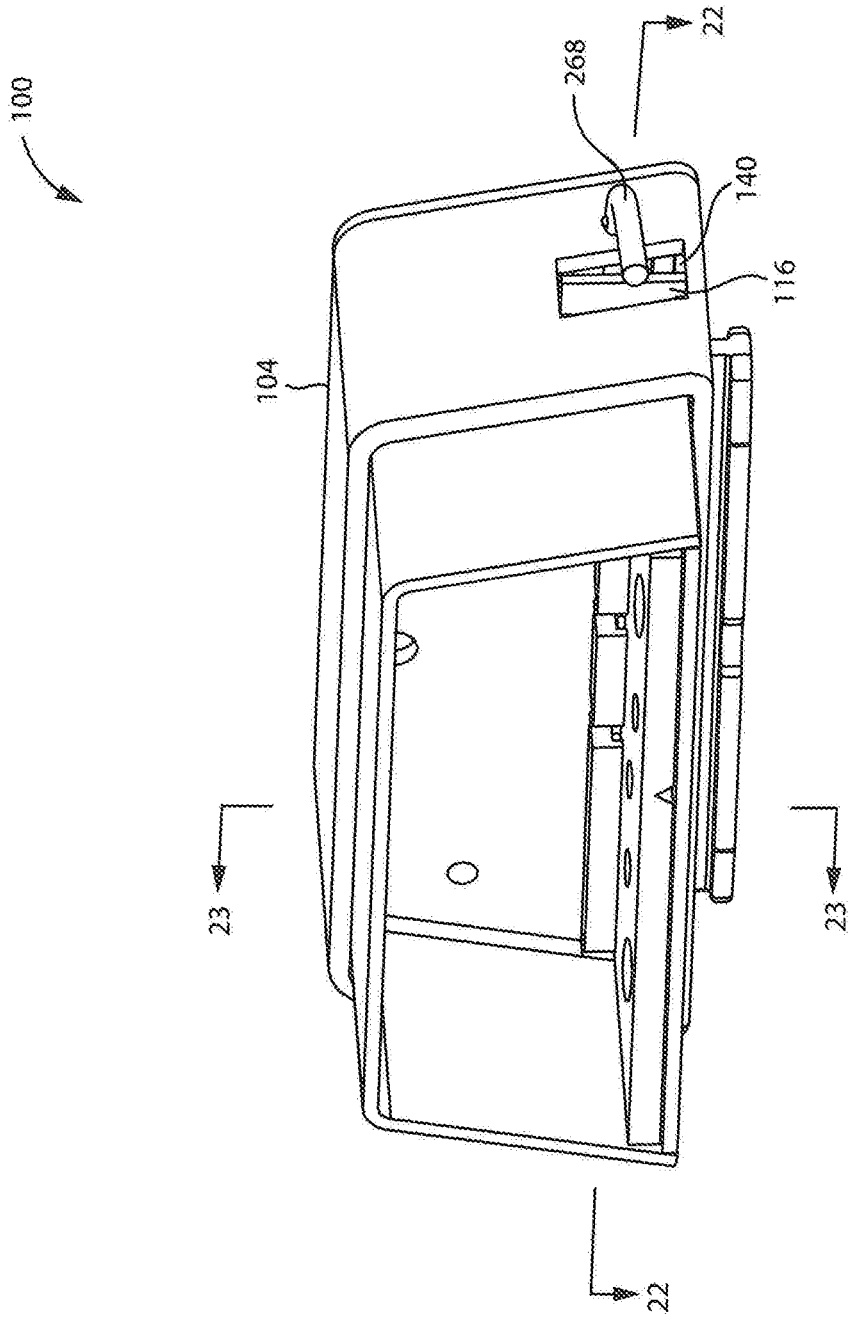


FIG. 20

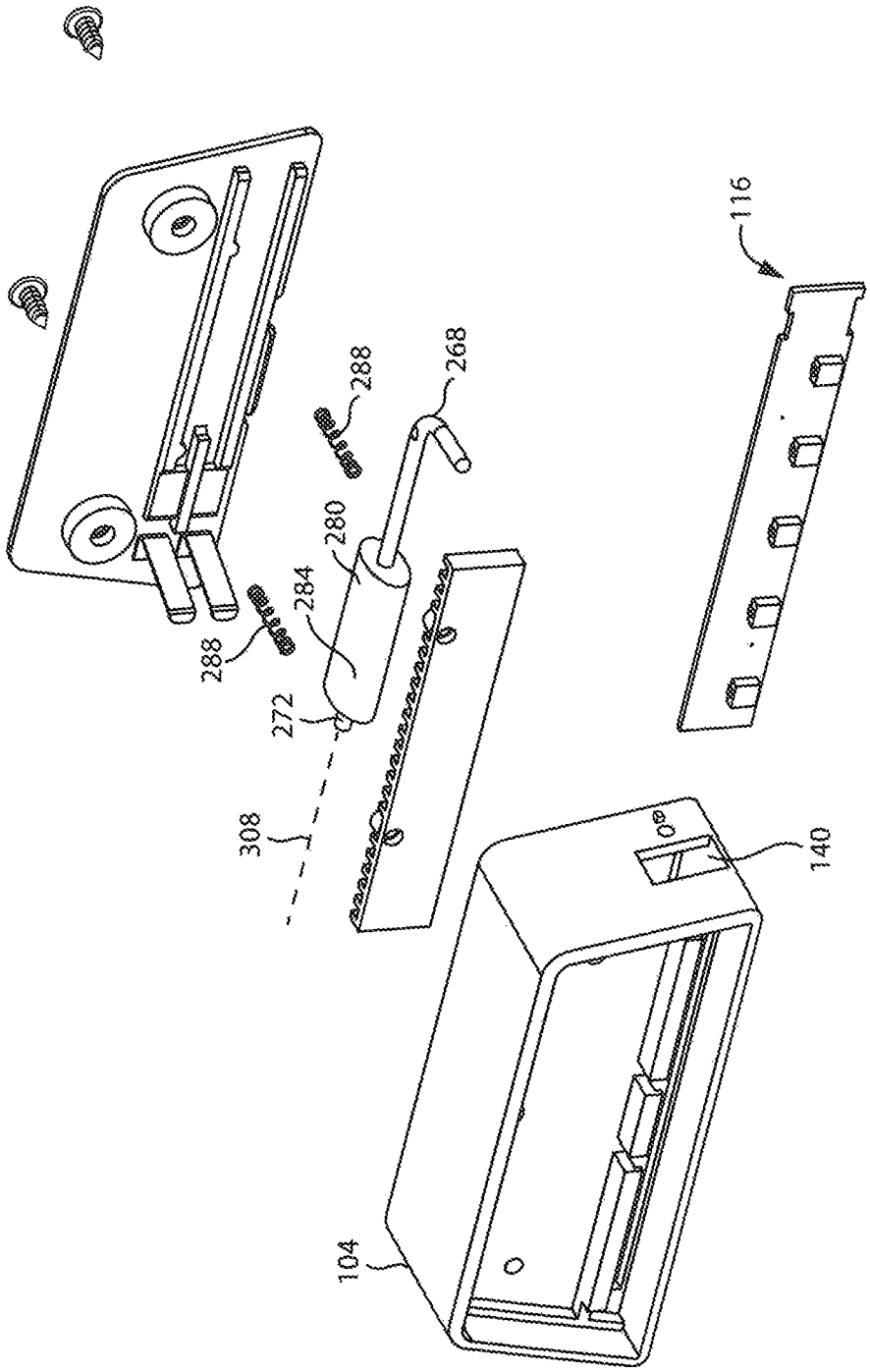


FIG. 21

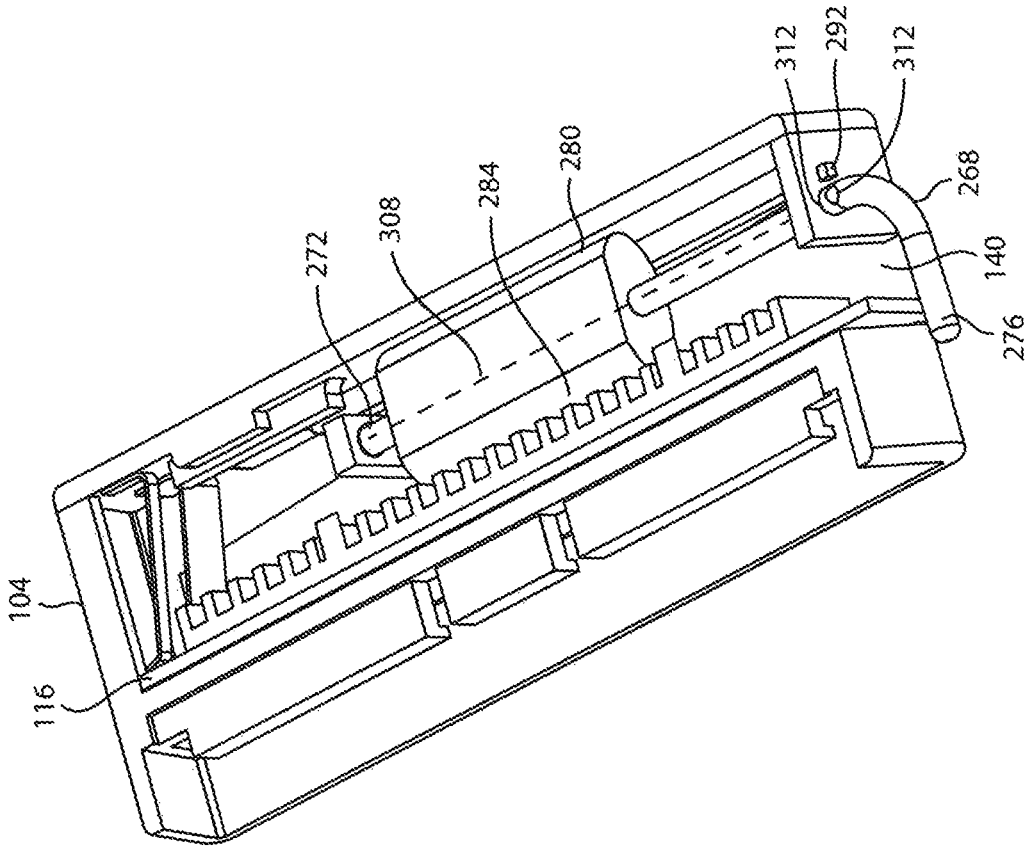


FIG. 22

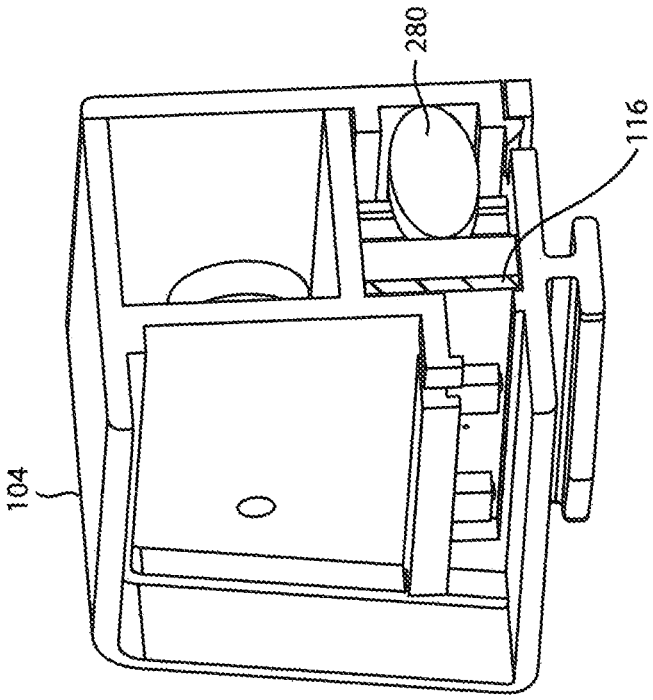


FIG. 23

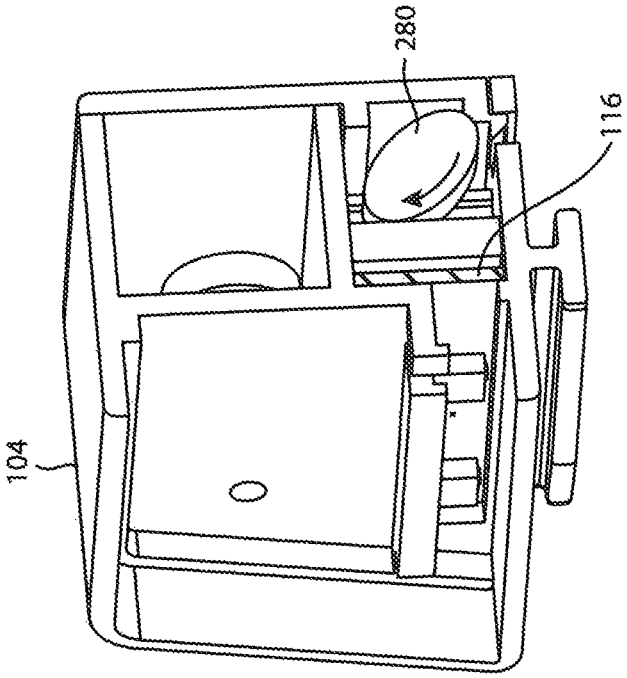


FIG. 24

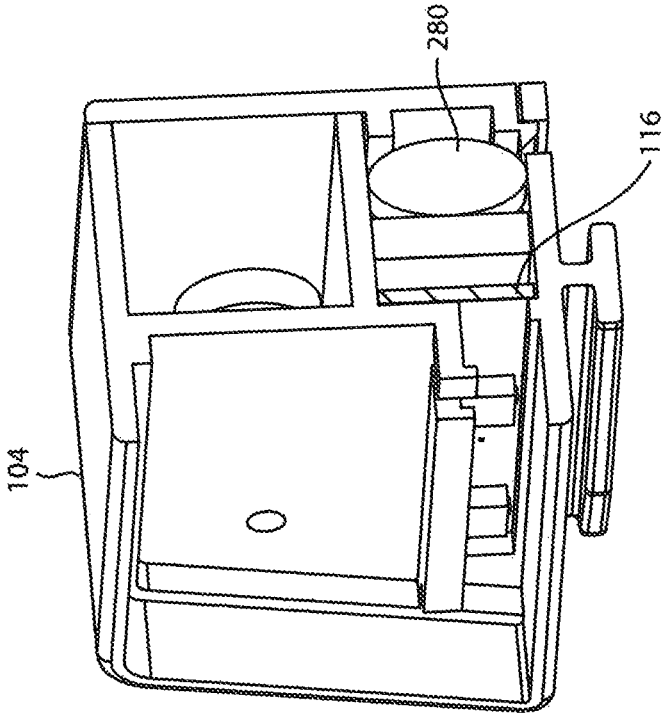


FIG. 25

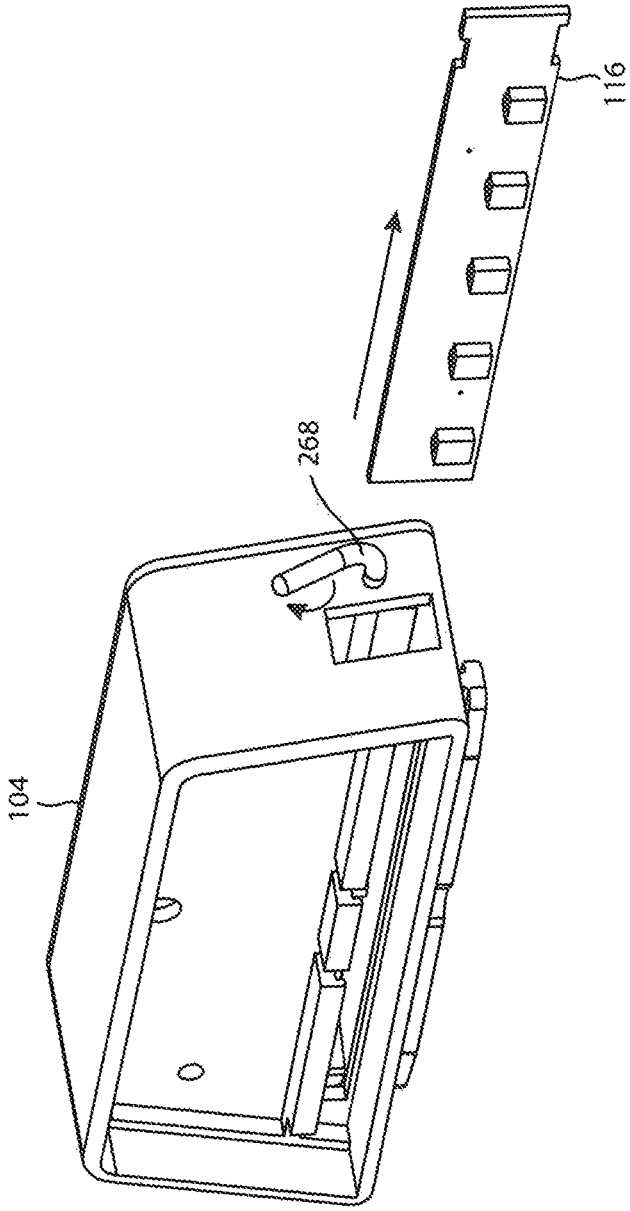


FIG. 26

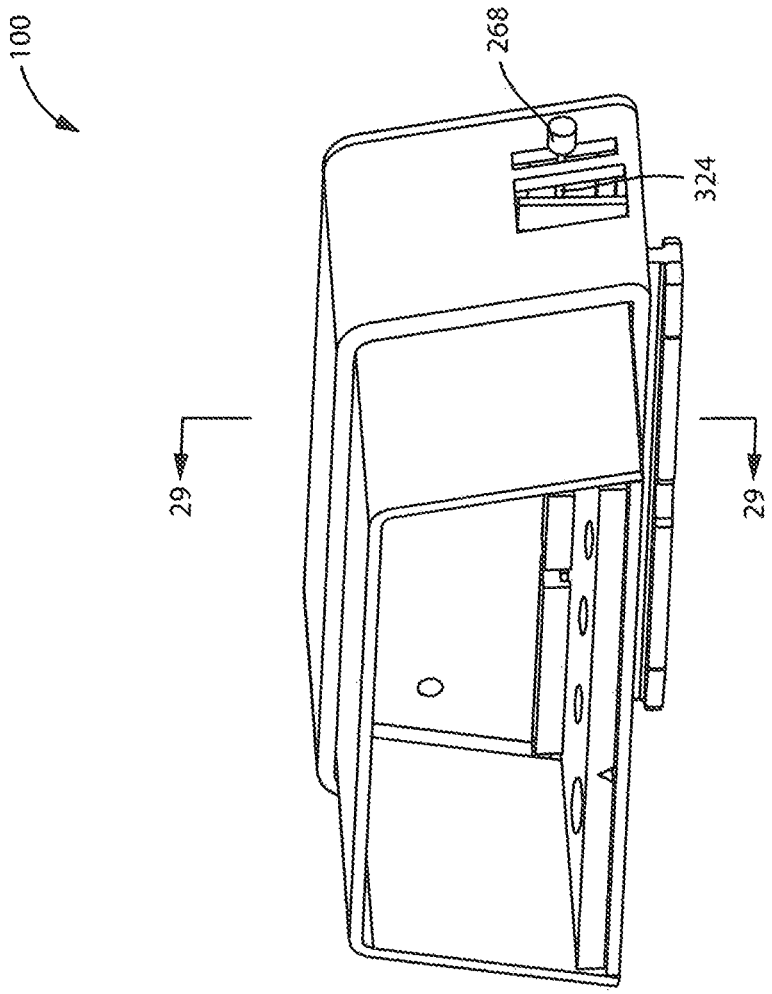


FIG. 27

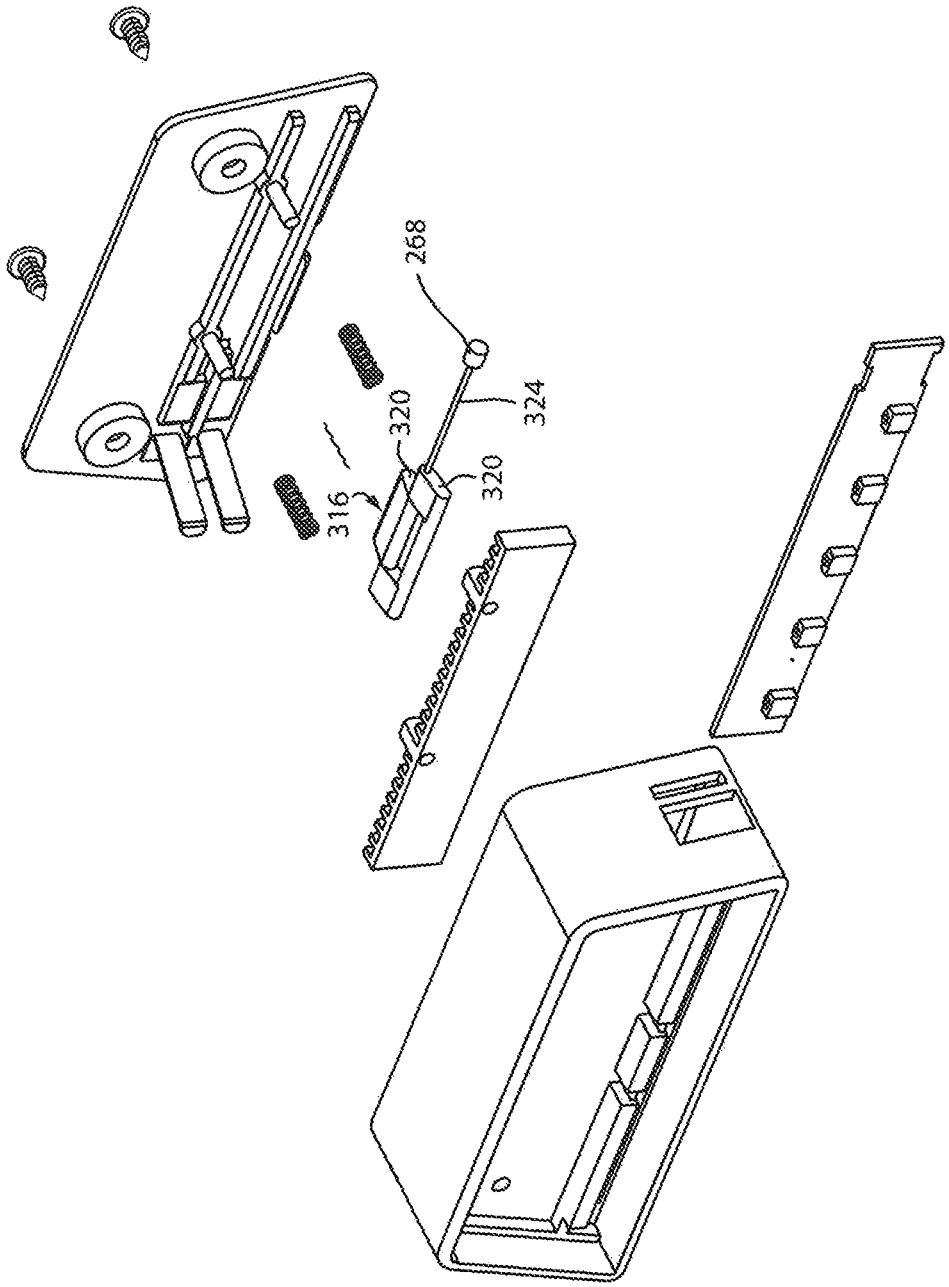


FIG. 28

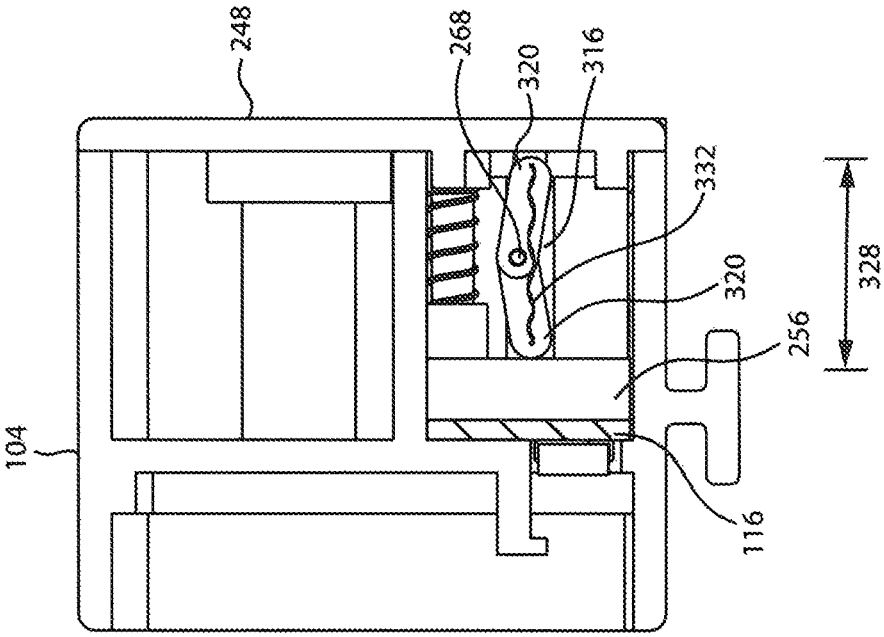


FIG. 29

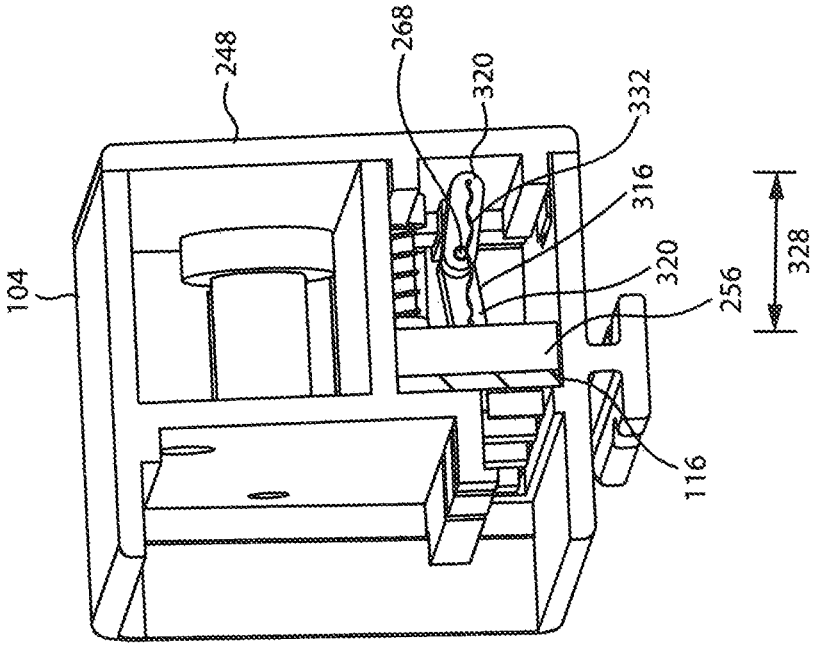


FIG. 30

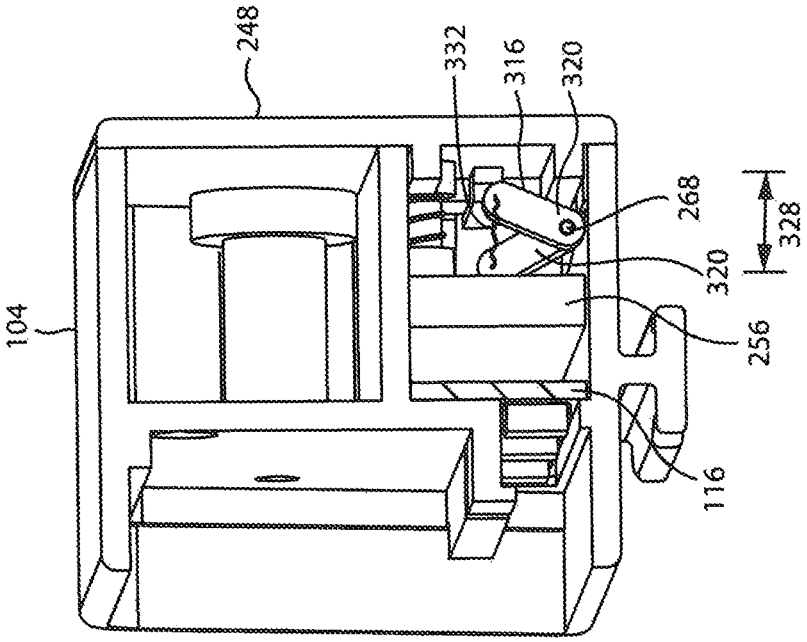


FIG. 31

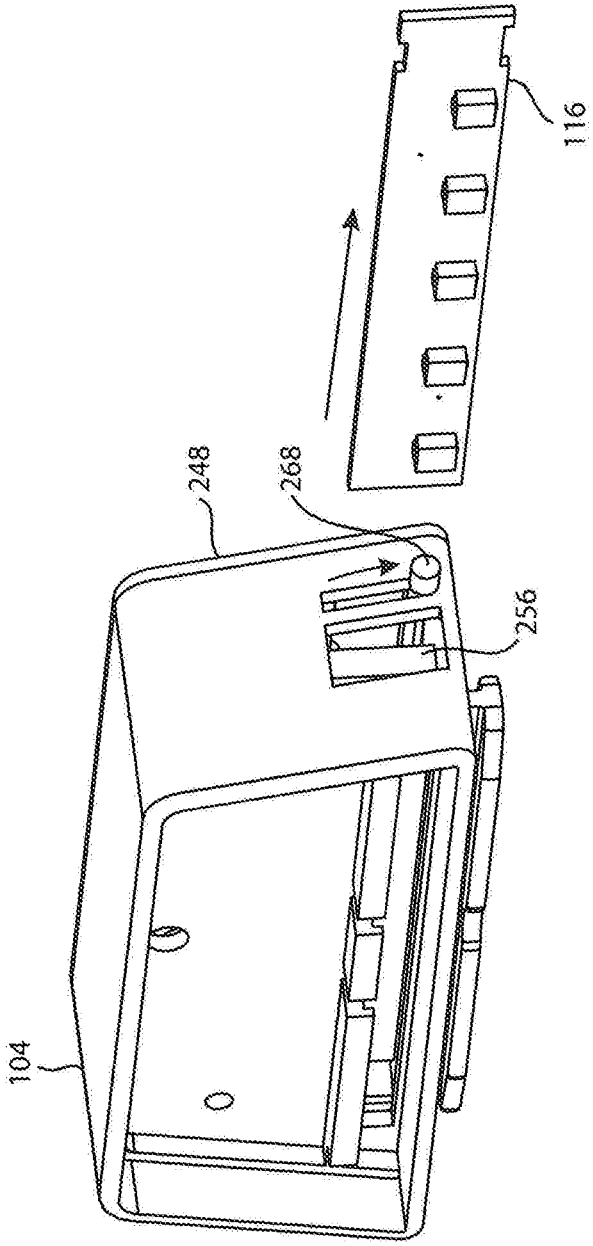


FIG. 32

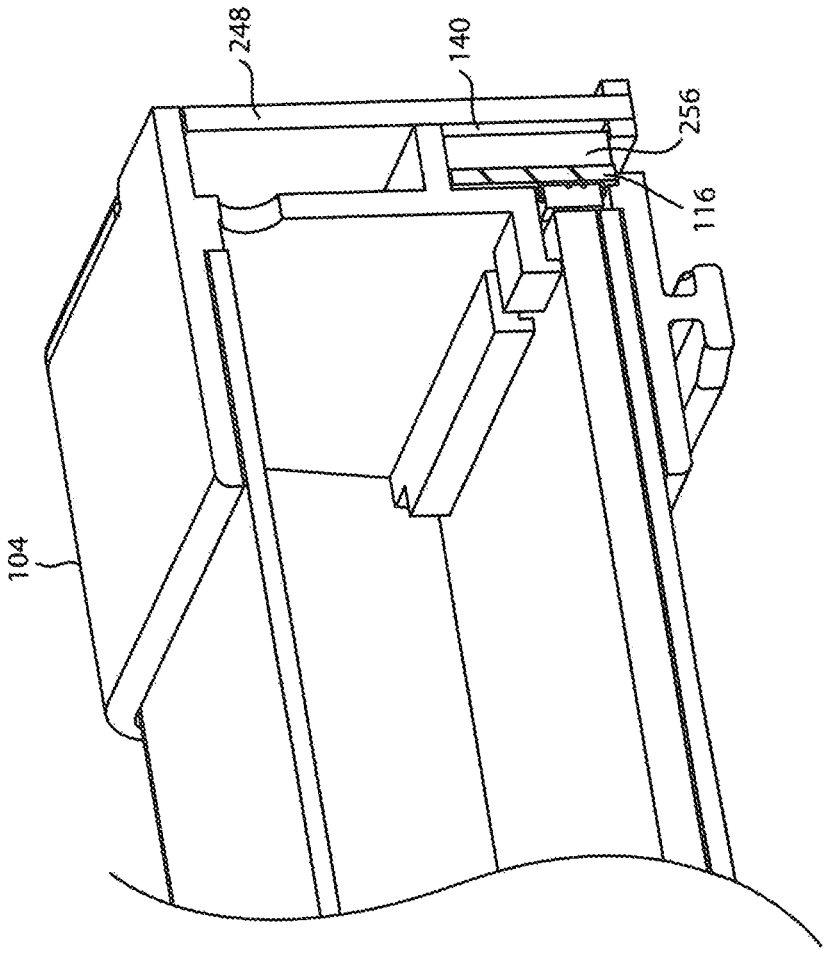


FIG. 33

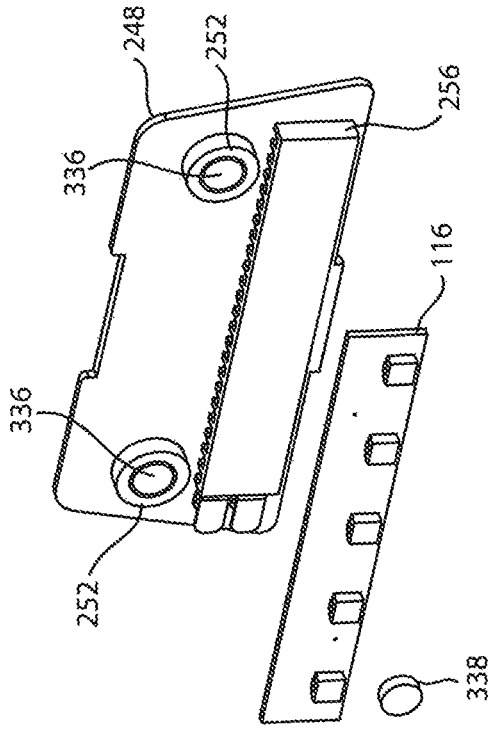


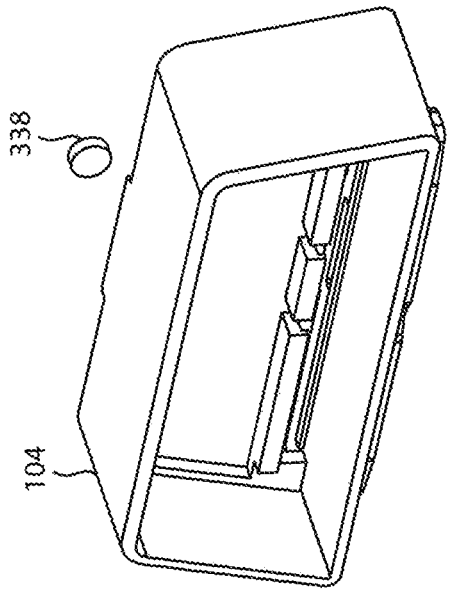


FIG. 34

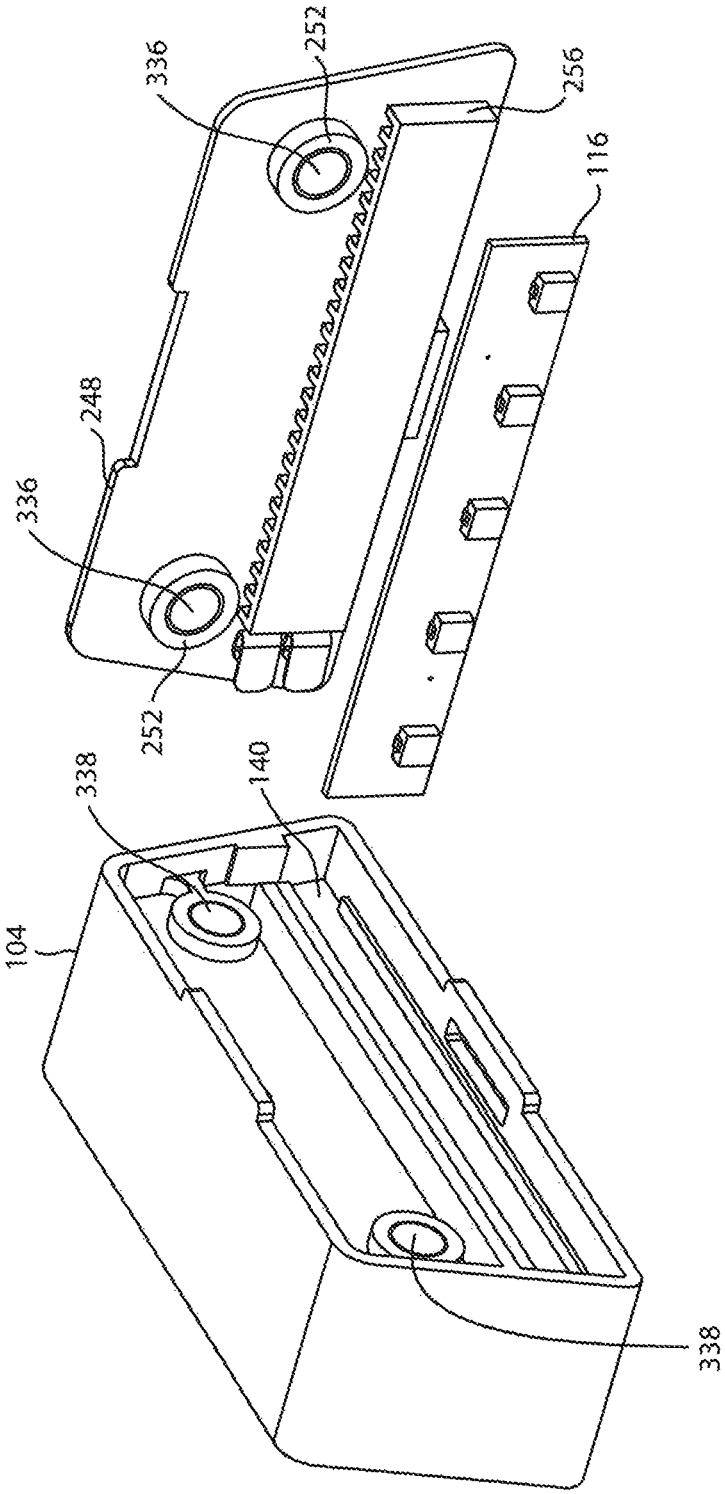


FIG. 35

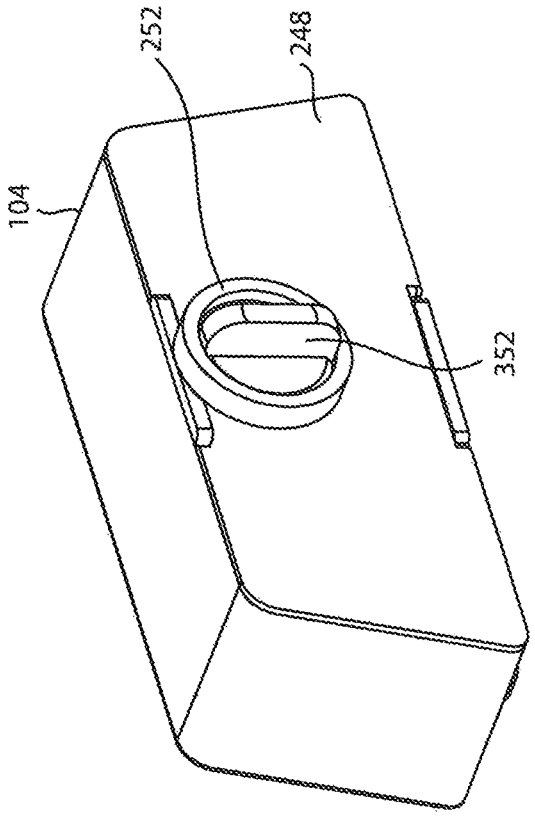


FIG. 36

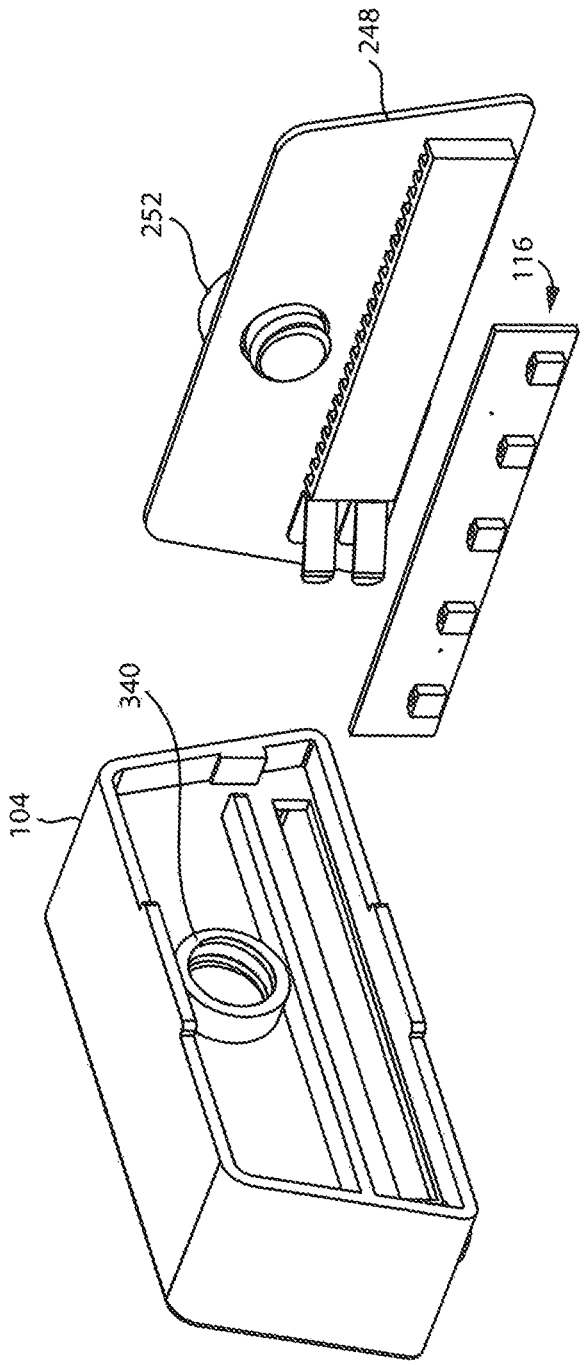


FIG. 37

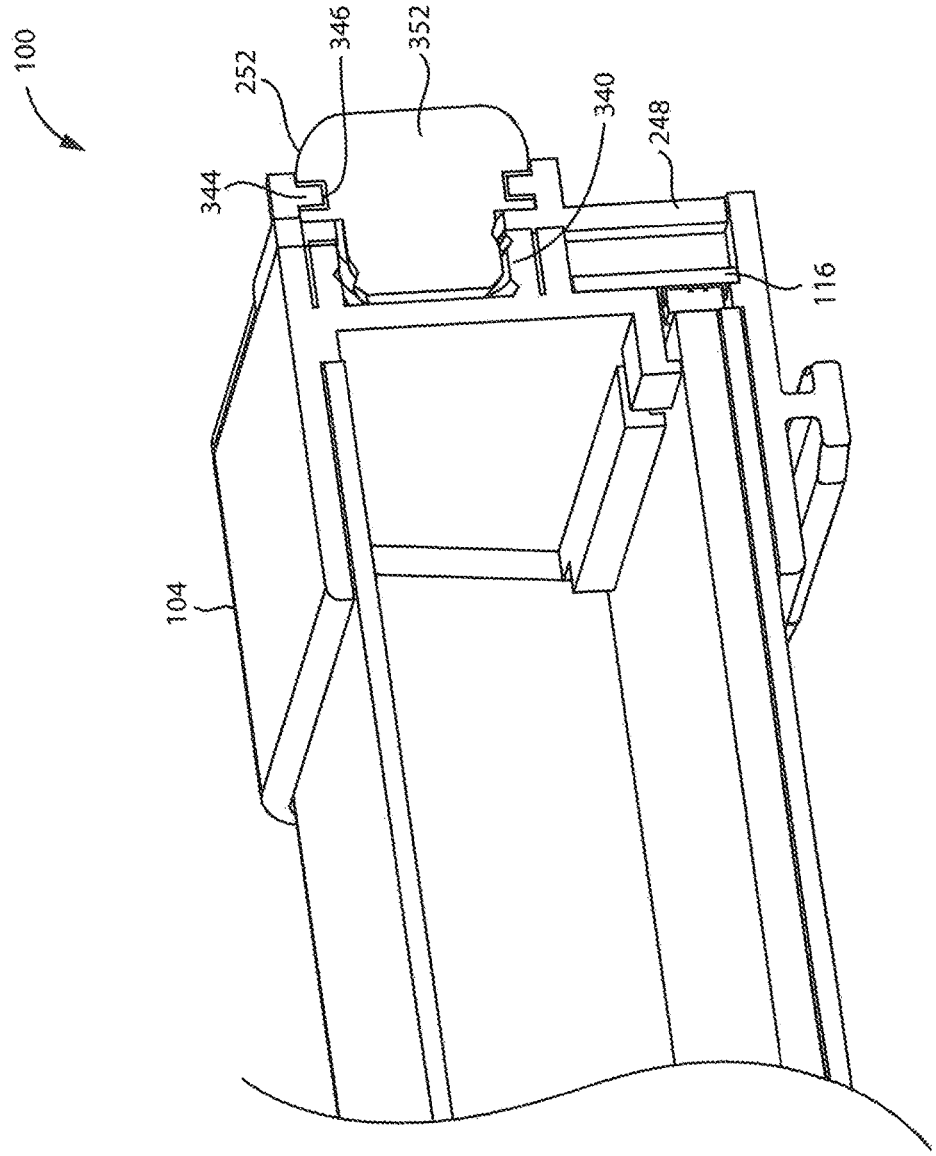


FIG. 38

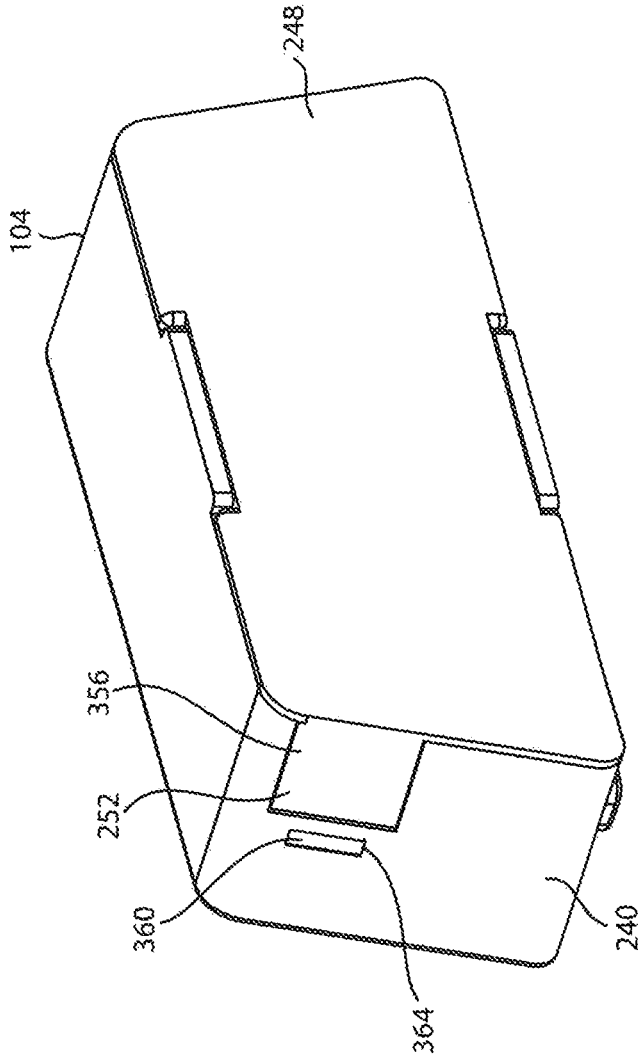


FIG. 39

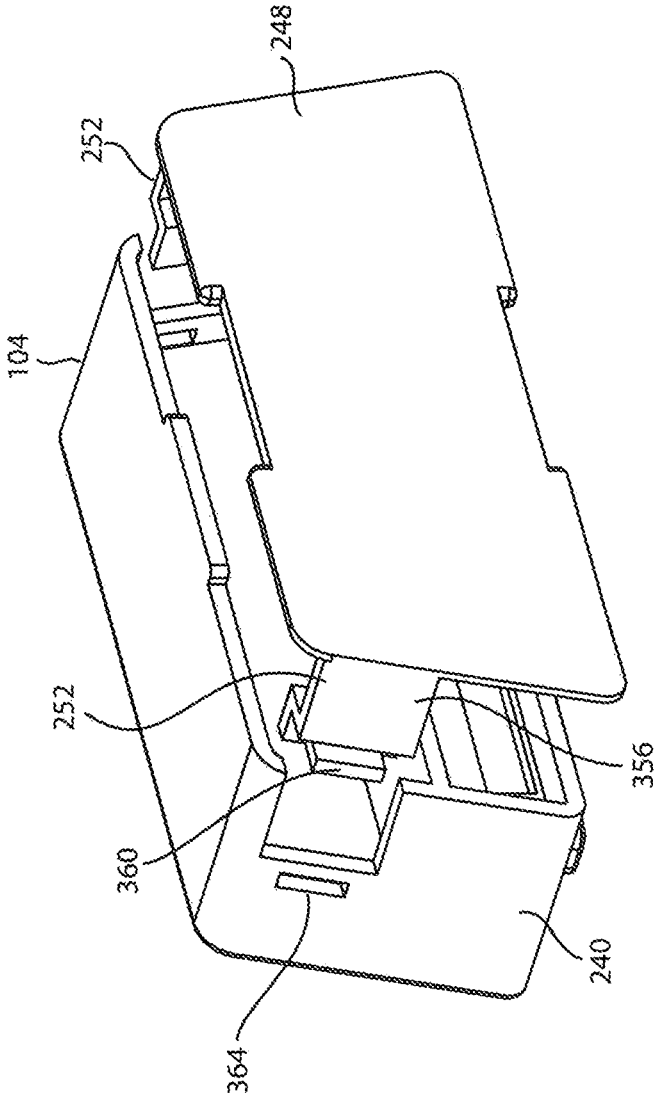


FIG. 40

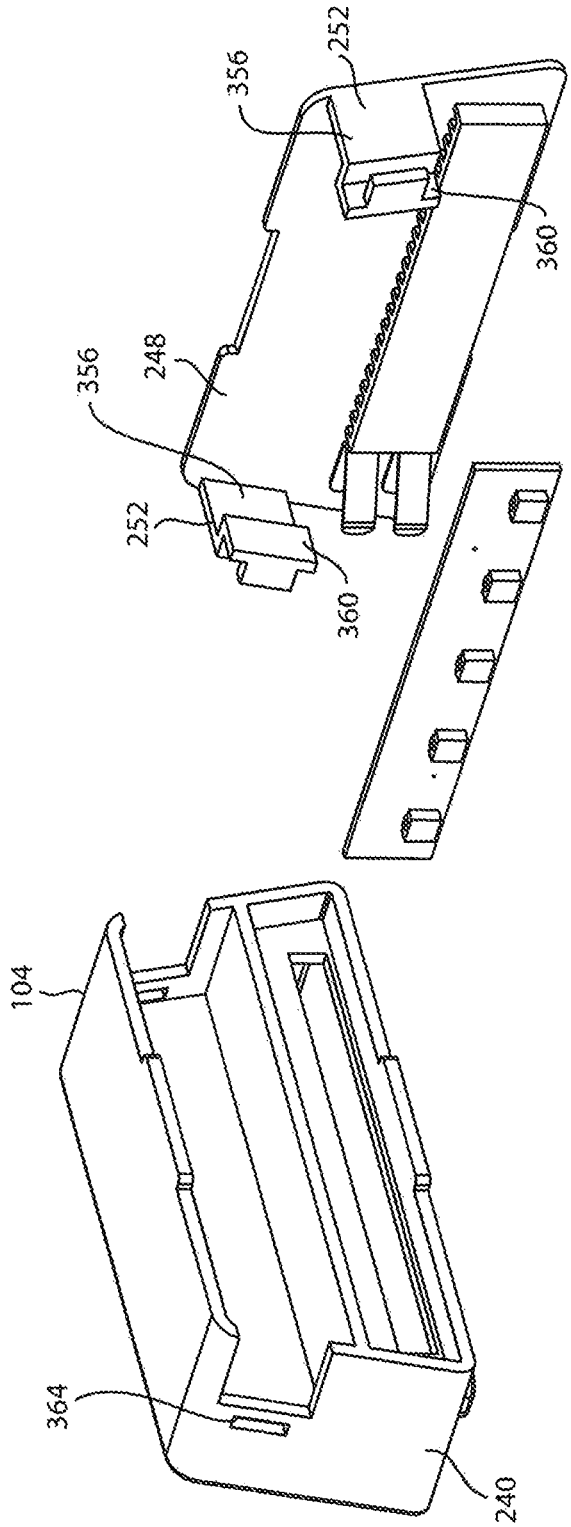


FIG. 41

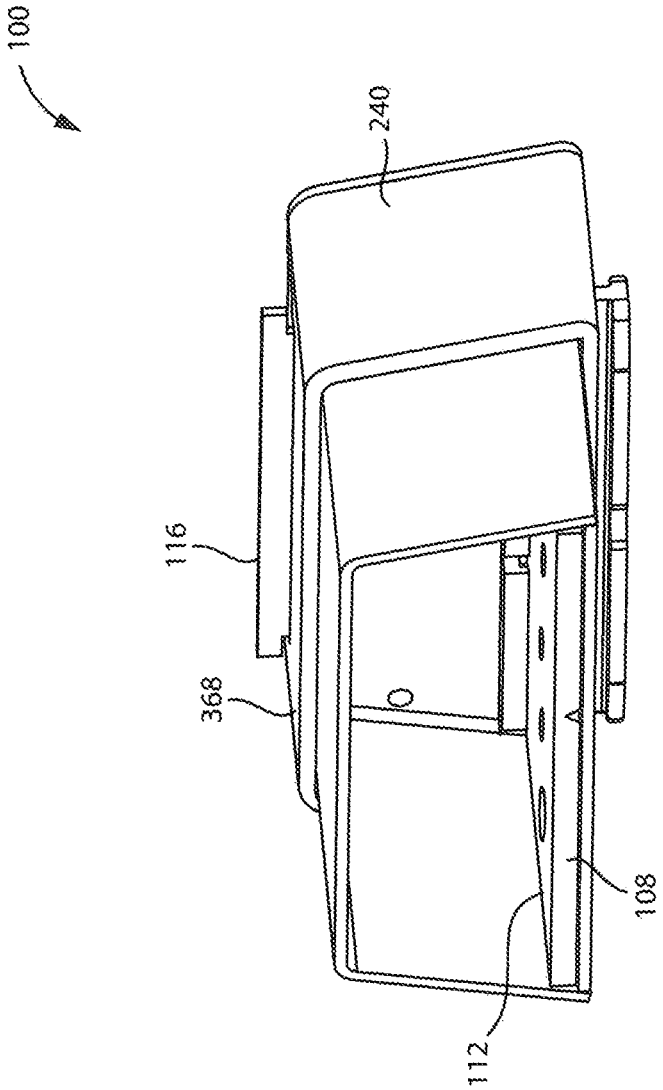


FIG. 42

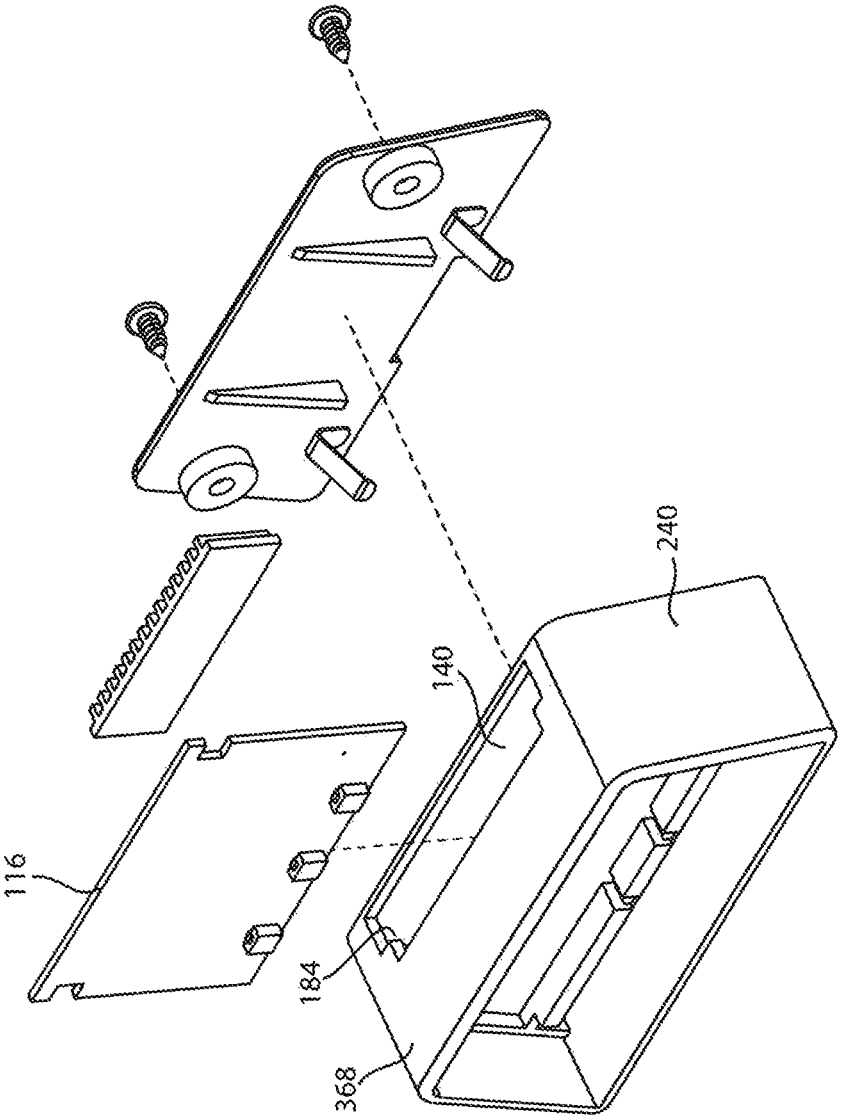


FIG. 43

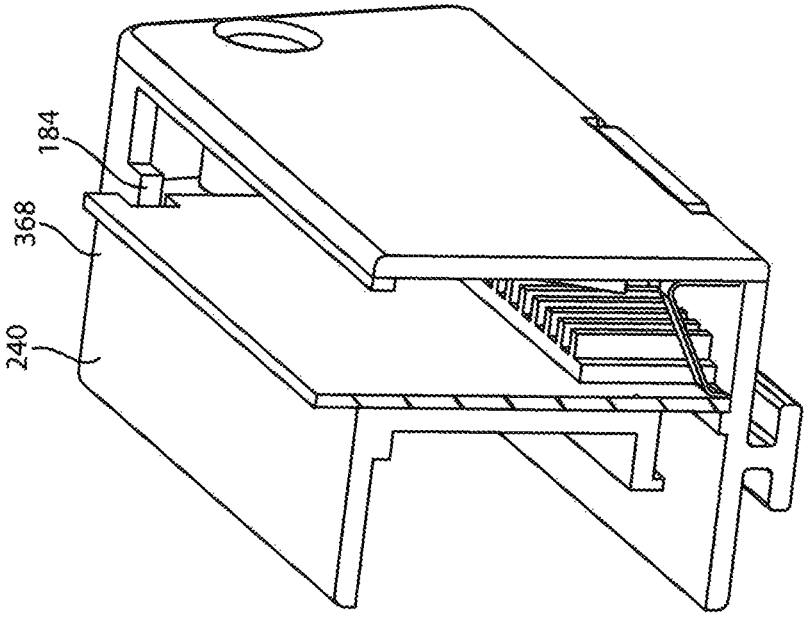


FIG. 44

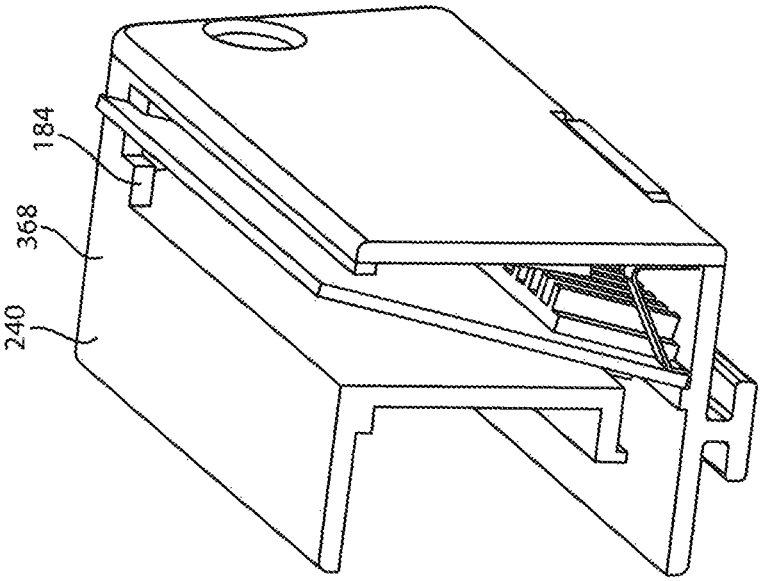


FIG. 45

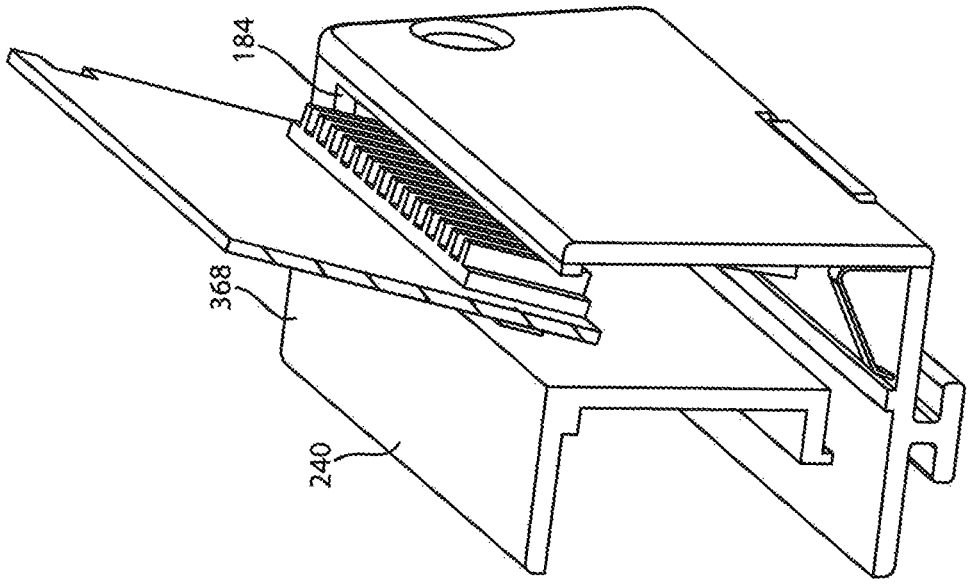


FIG. 46

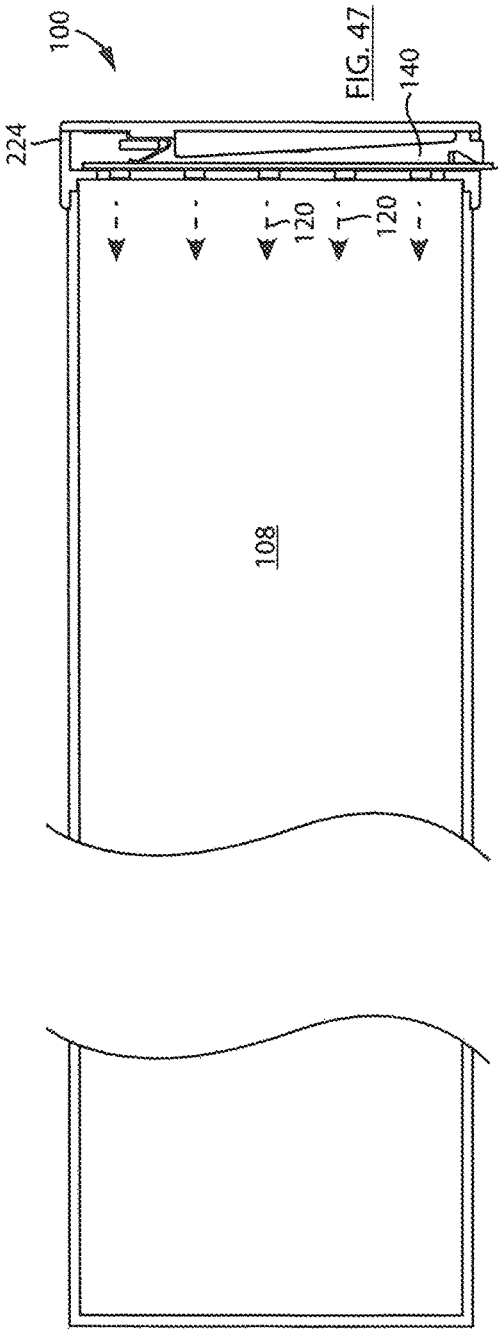
100
224
140
116
120
120
108

FIG. 47

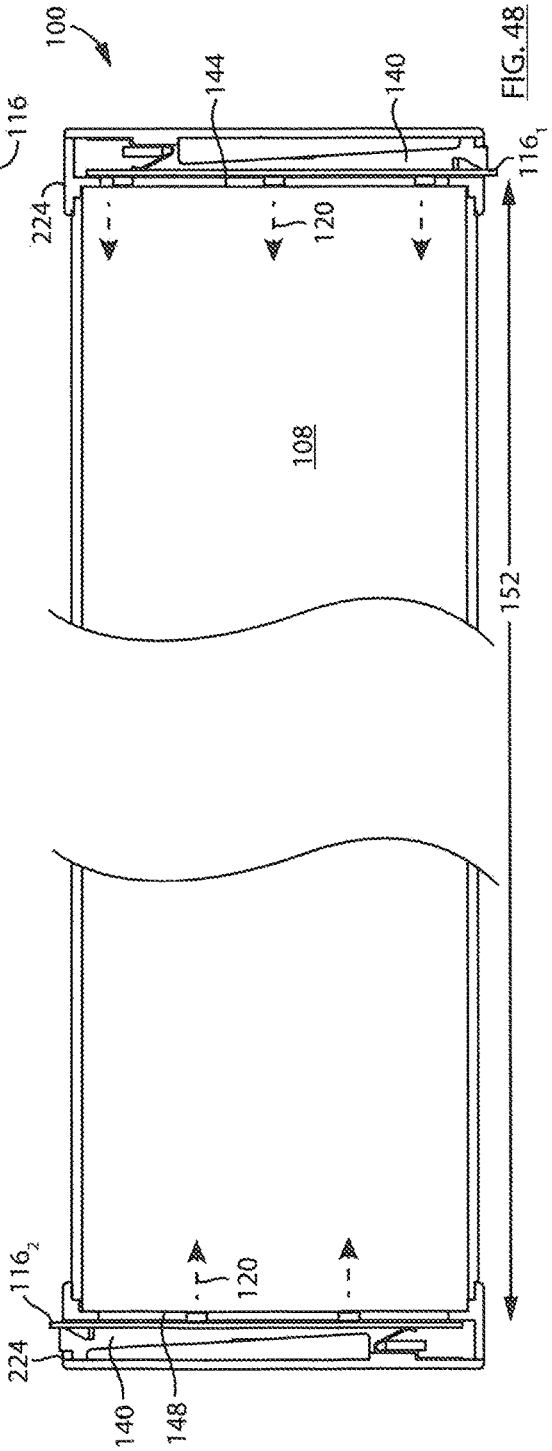
100
144
140
$116_1$
224
120
108
152
$116_2$
120
224
140
148

FIG. 48

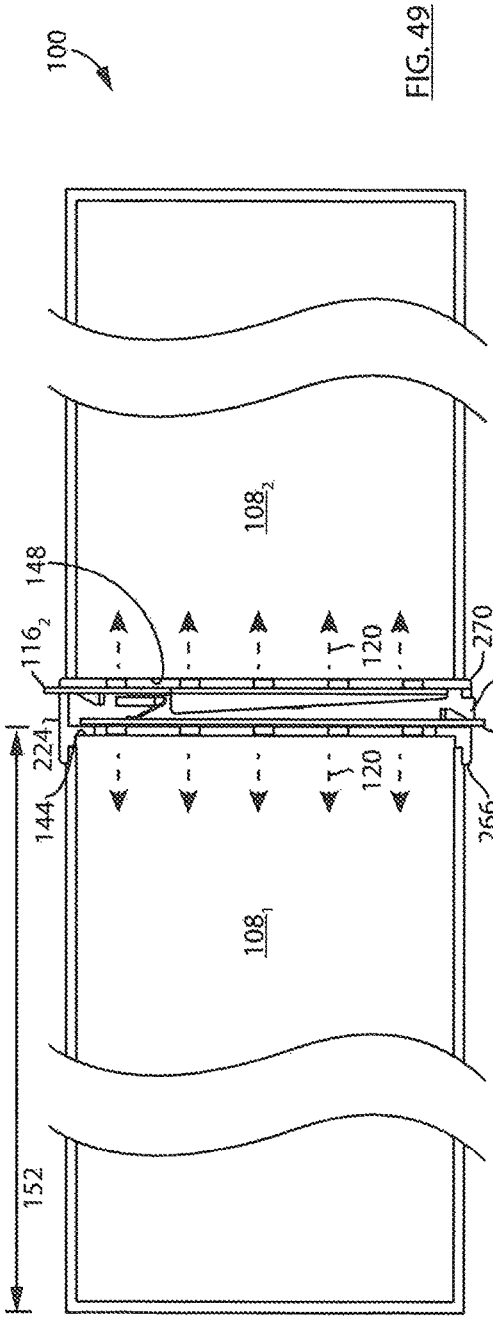
100
108₂
108₁
148
116₂
224₁
144
120
270
140
116₁
266
152

FIG. 49

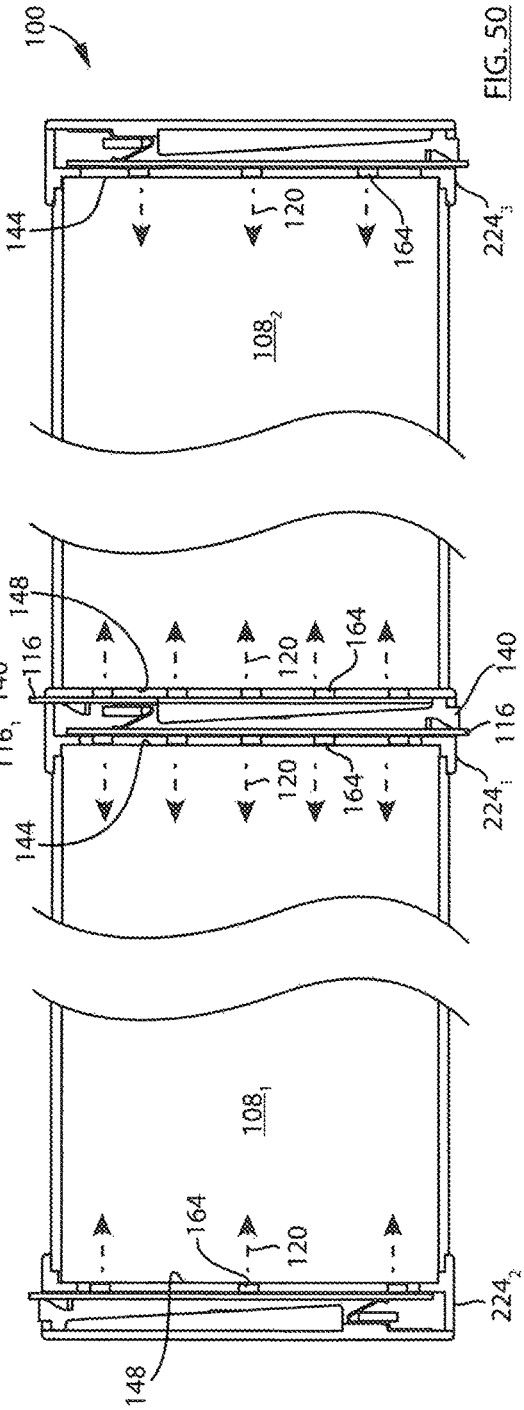
100
144
120
164
224₃
108₂
148
116
140
224₁
108₁
224₂

FIG. 50

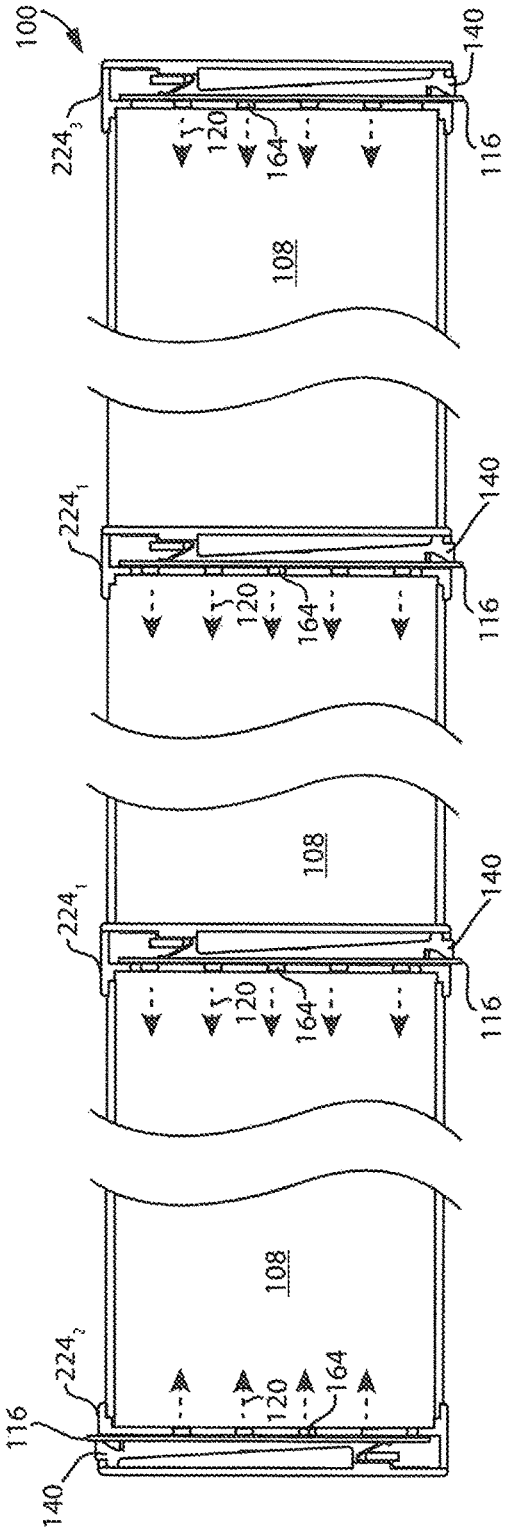
100
$224_3$
$224_1$
$224_1$
$224_3$
108
108
108
120
164
116
140

FIG. 51

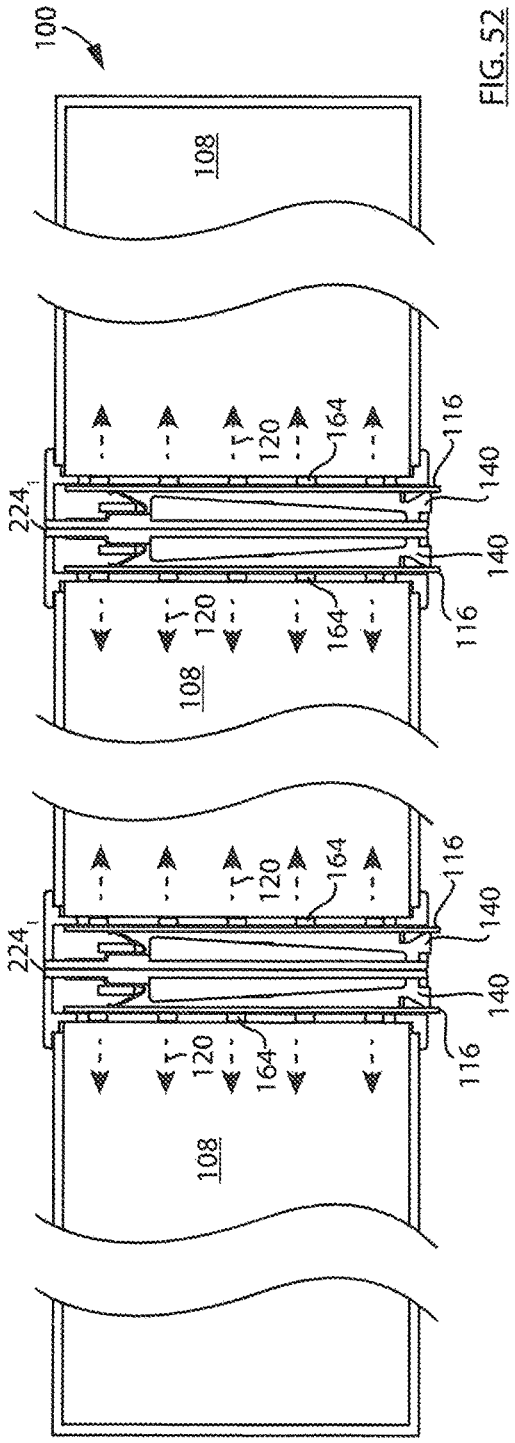
100
$224_1$
$224_1$
108
108
120
164
116
140

FIG. 52

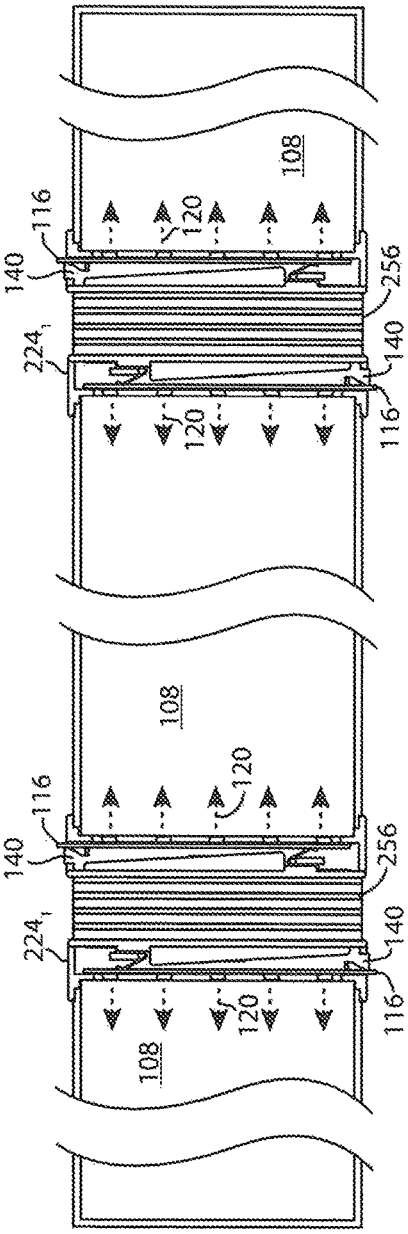
100
108
116
120
140
256
224
116
120
140
108
116
120
140
256
224
140
116
120
108

FIG. 54

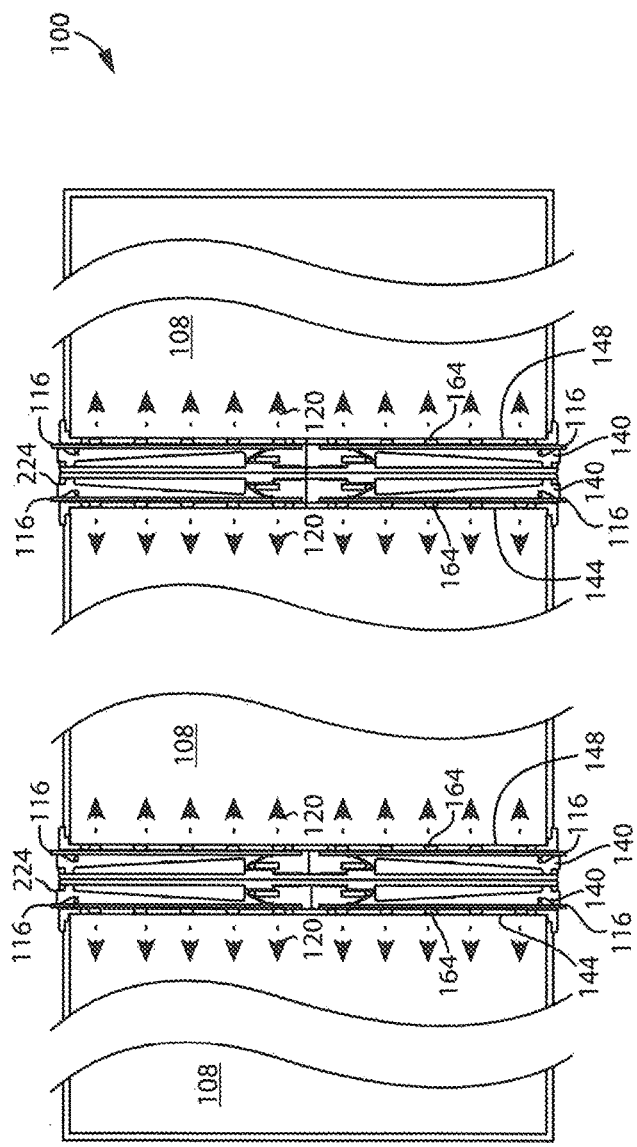
100
108
116
120
164
148
116
224
140
116
120
140
116
164
144
108
116
120
164
148
116
224
140
116
120
140
116
164
144
108

FIG. 53

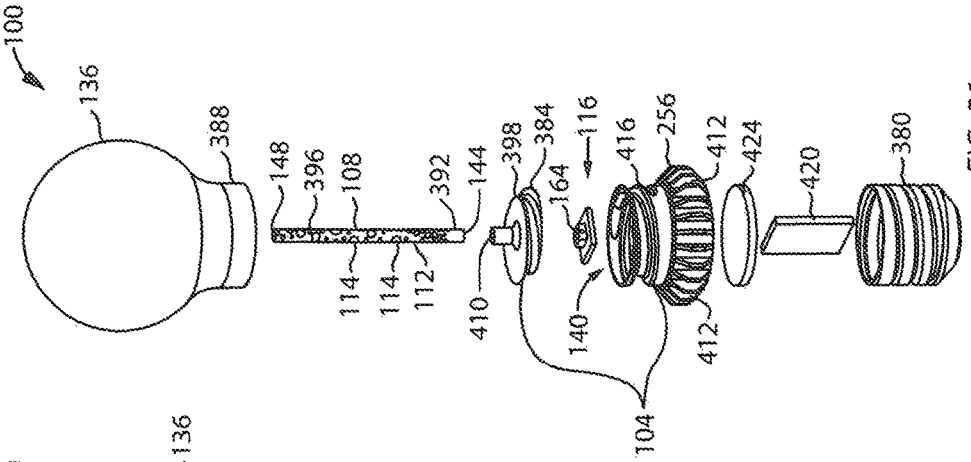
100
136
388
148
396
108
114
114
112
392
144
410
398
384
164
116
140
416
256
412
412
424
420
380
104

FIG. 56

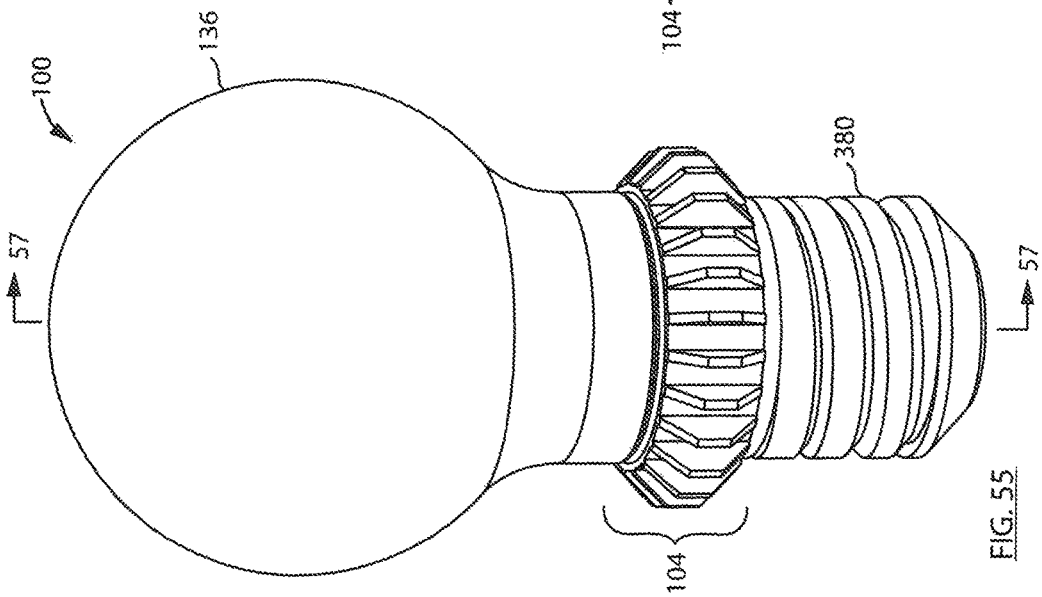
100
136
57
57
380
104

FIG. 55

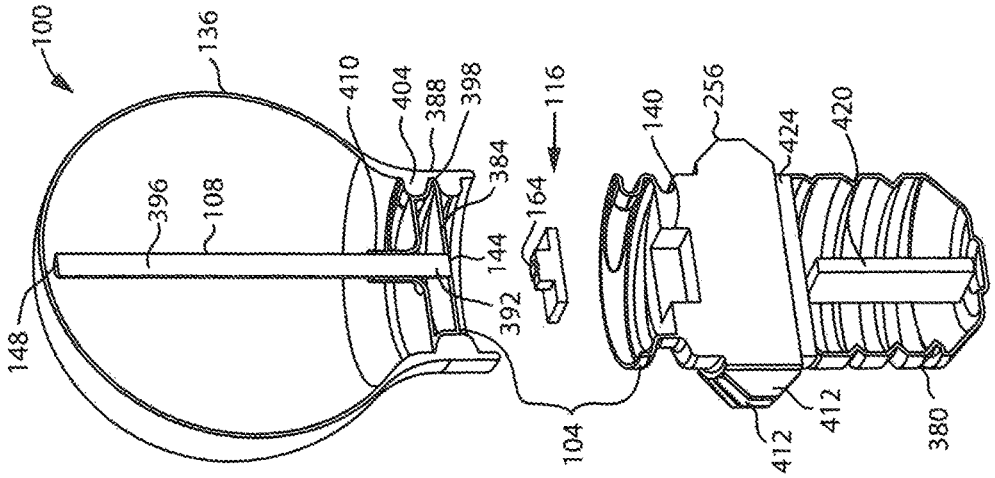


FIG. 57

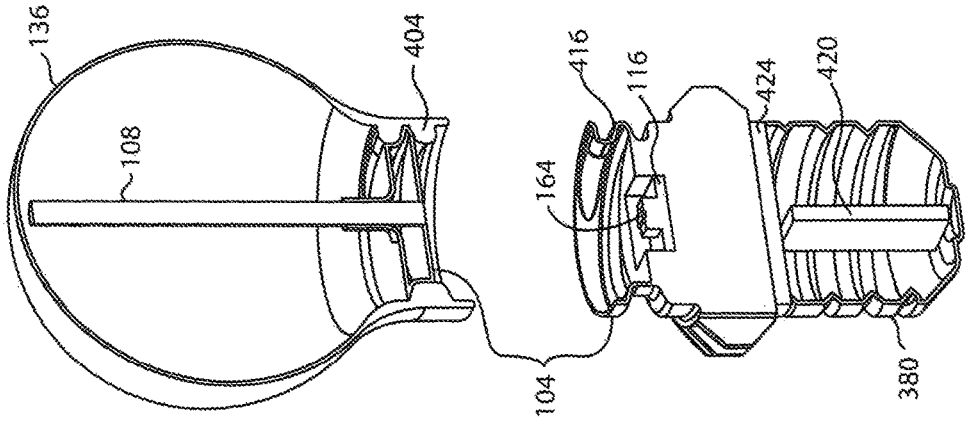


FIG. 59

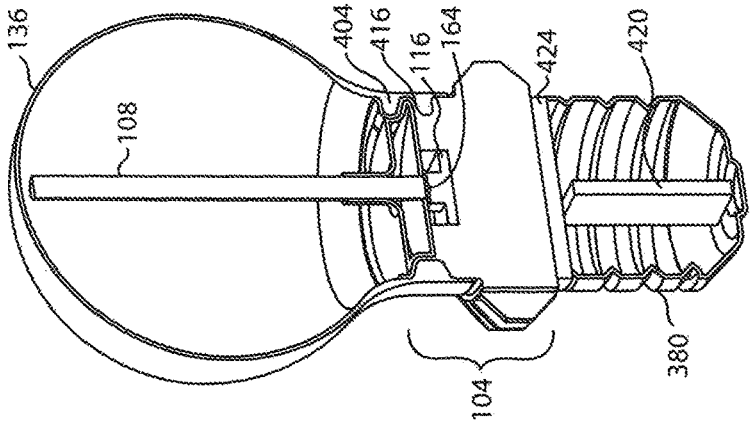


FIG. 58

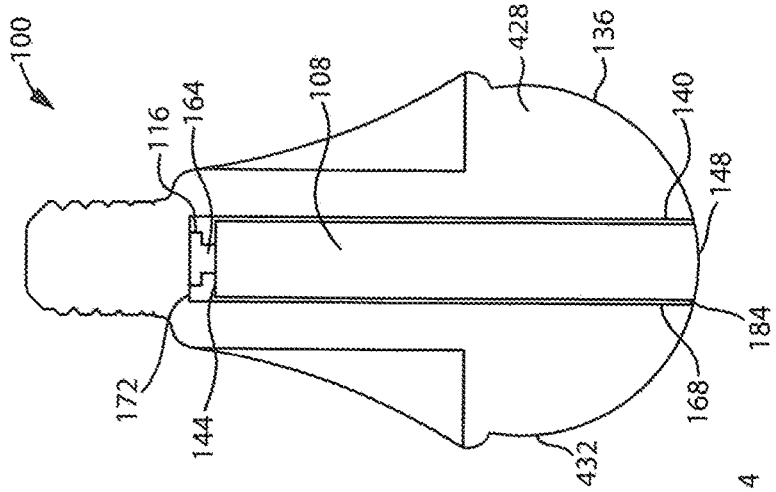


FIG. 62

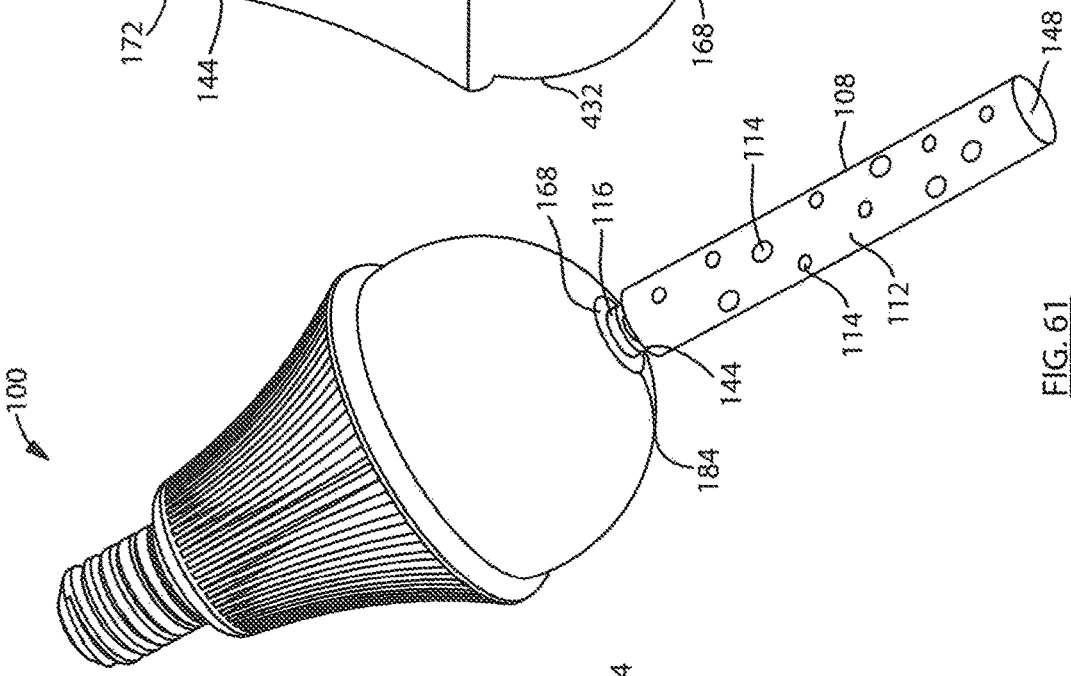


FIG. 61

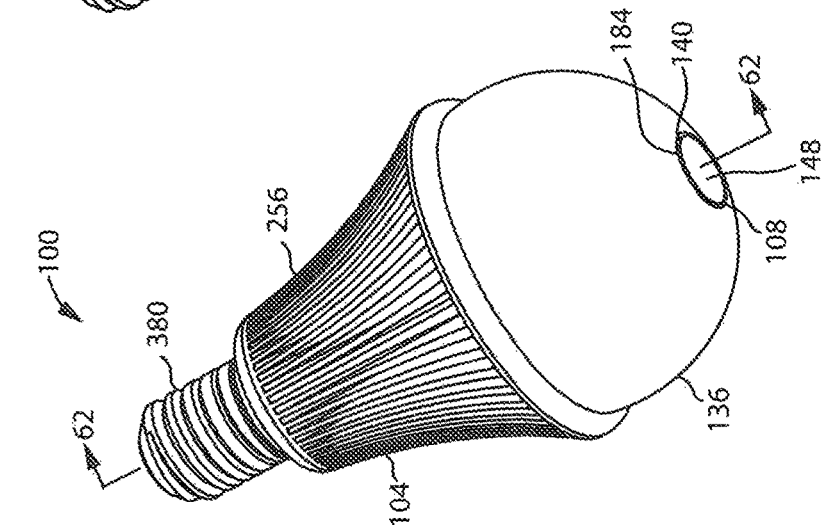


FIG. 60

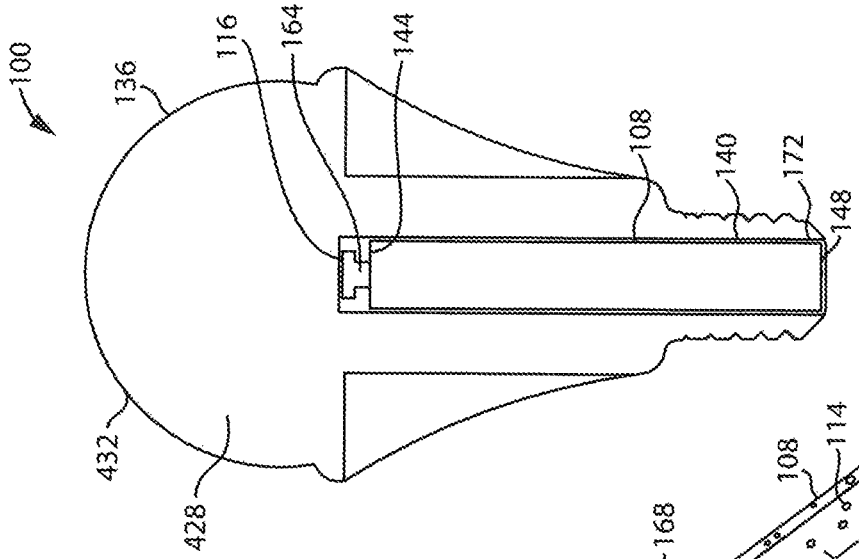


FIG. 65

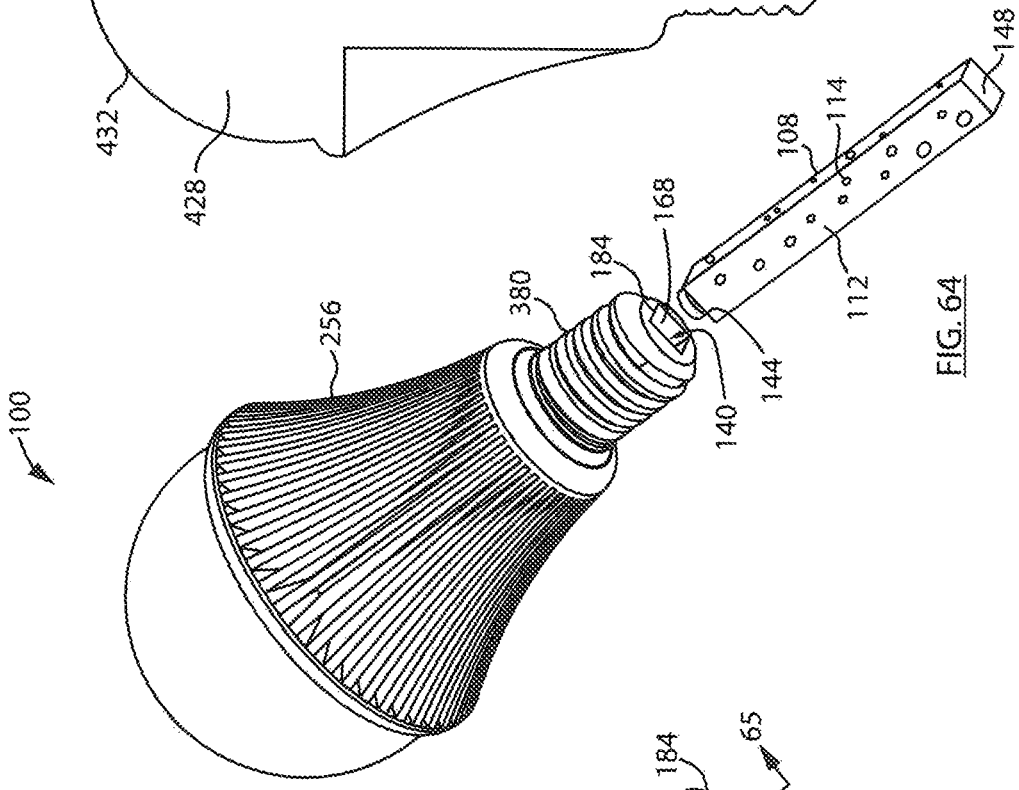


FIG. 64

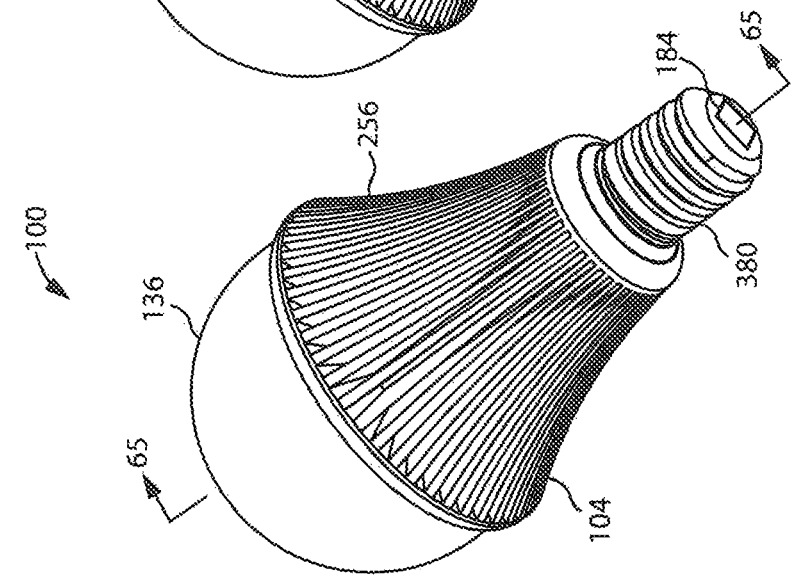


FIG. 63

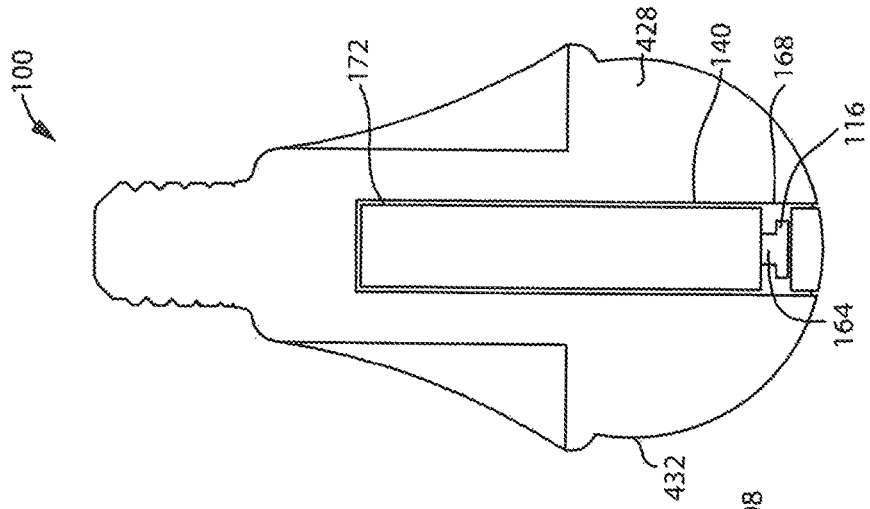


FIG. 68

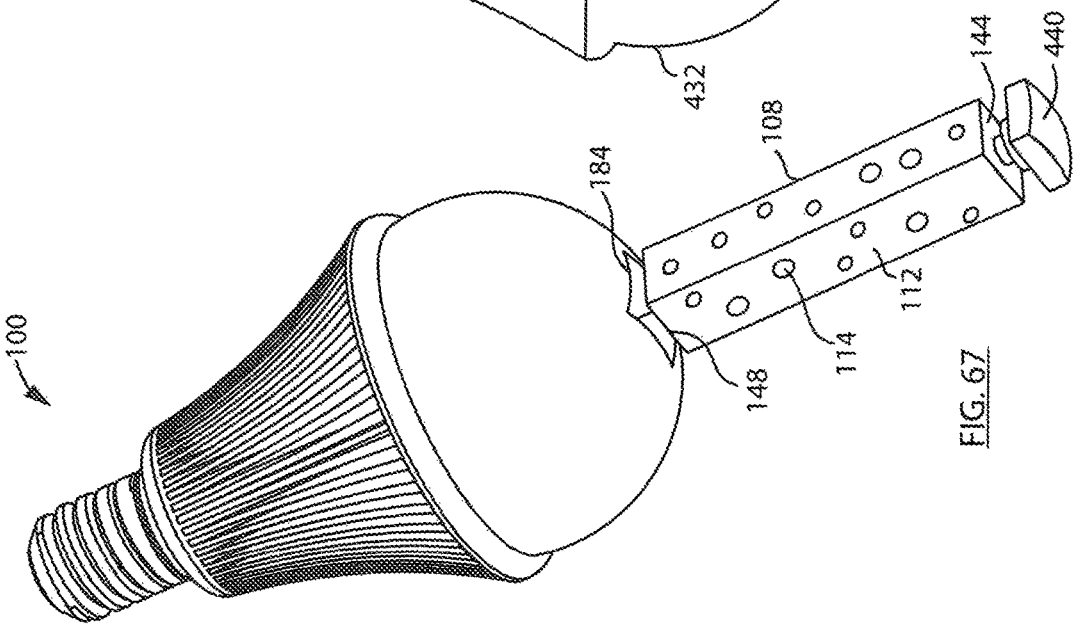


FIG. 67

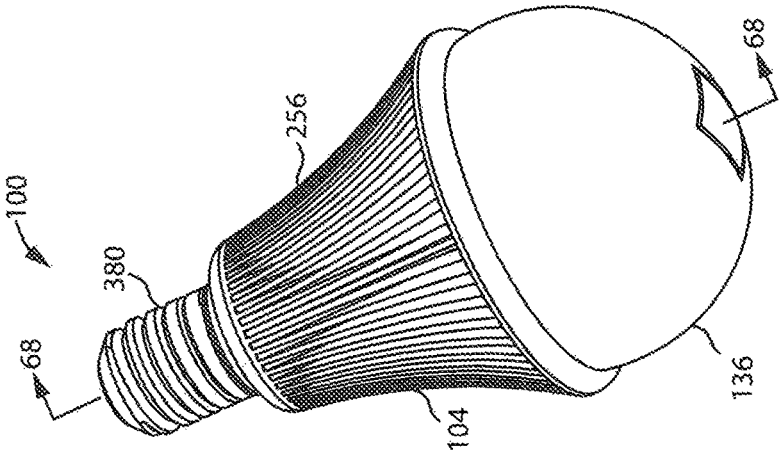


FIG. 66

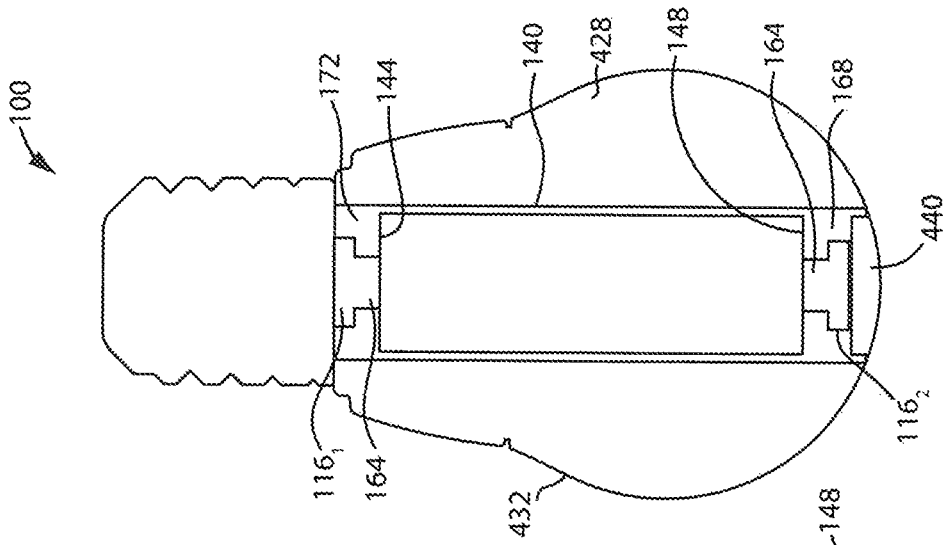


FIG. 71

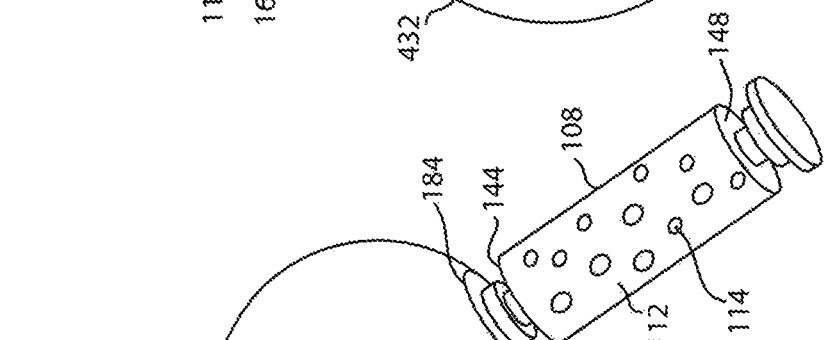


FIG. 70

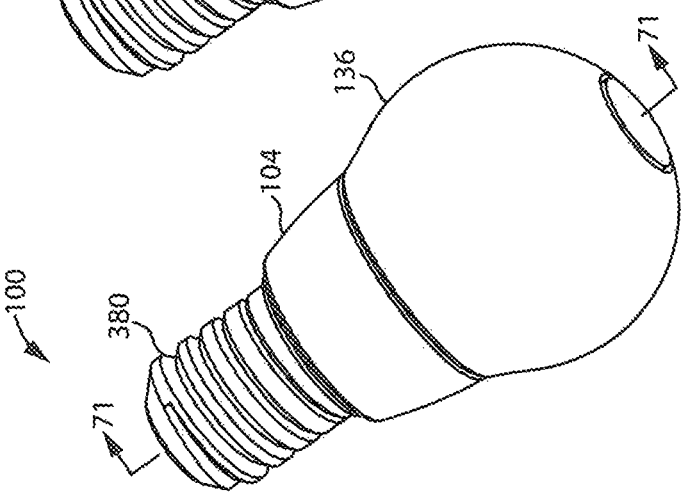


FIG. 69

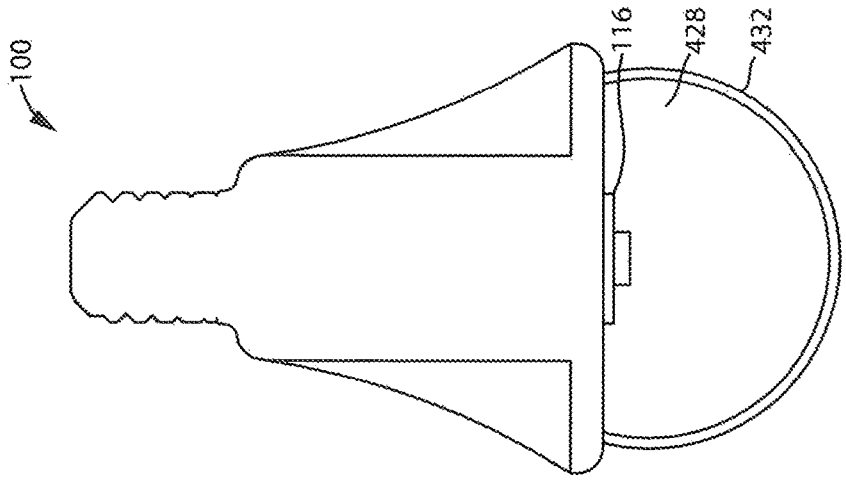


FIG. 74

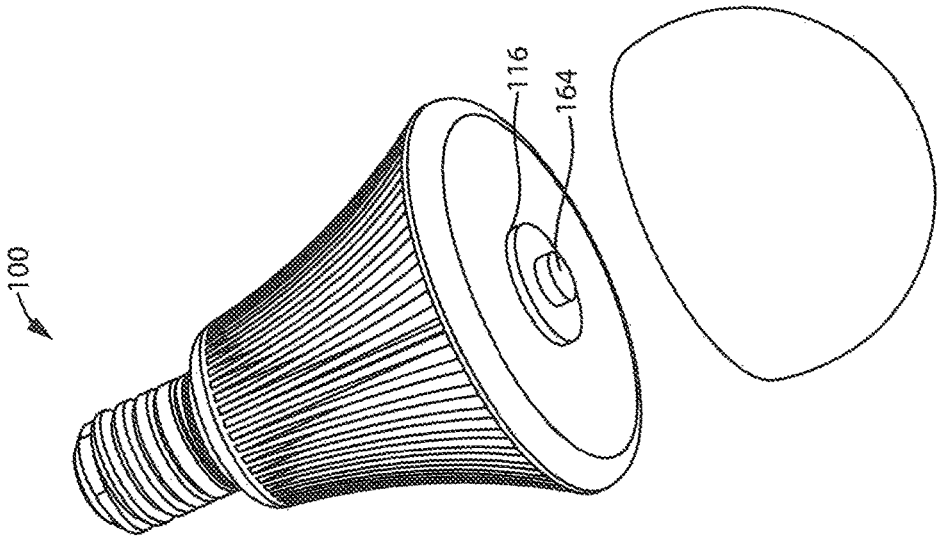


FIG. 73

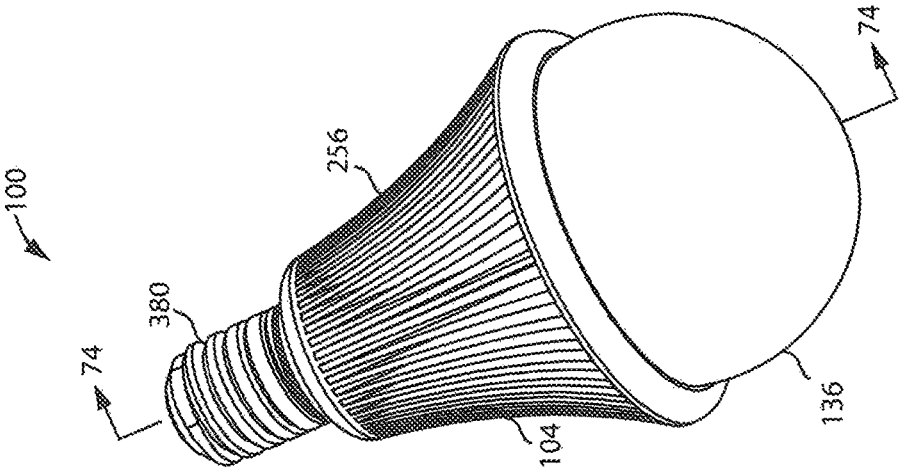


FIG. 72

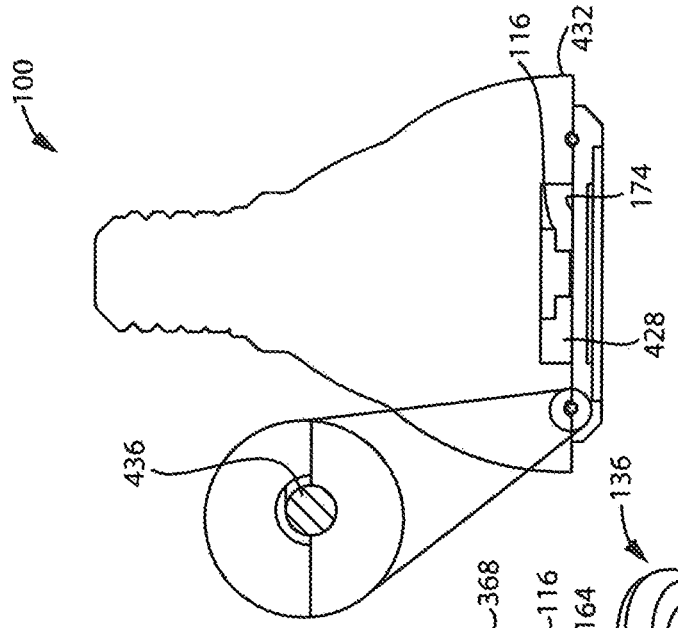


FIG. 77

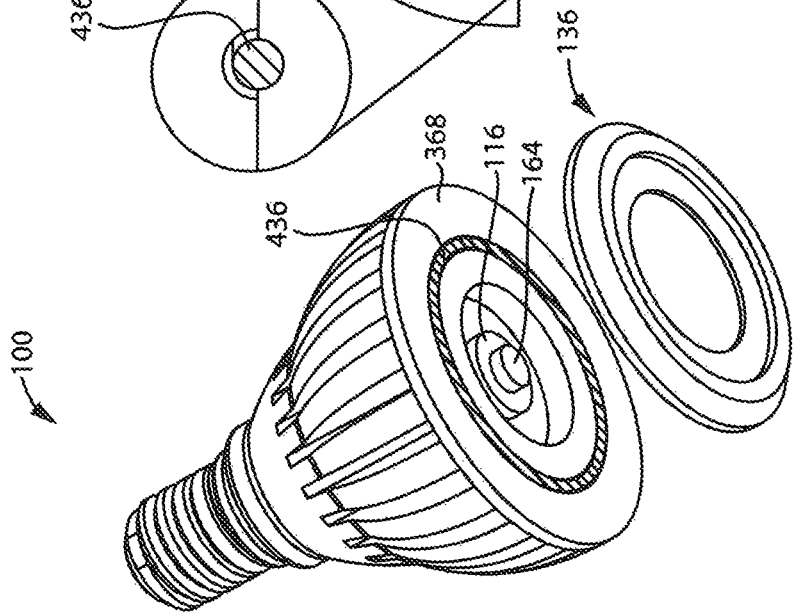


FIG. 76

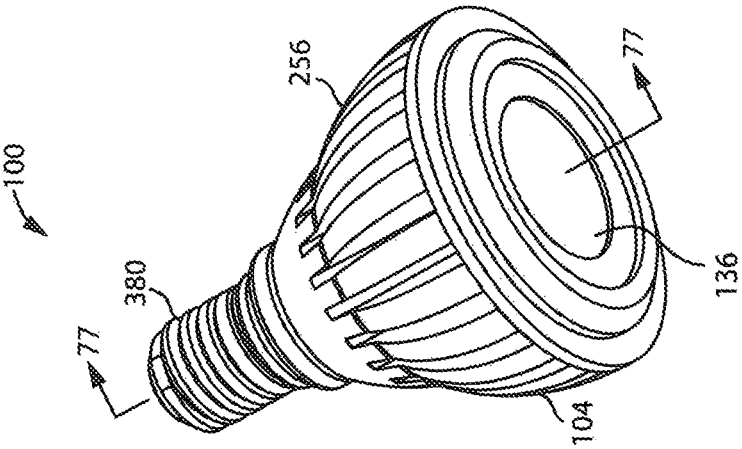


FIG. 75

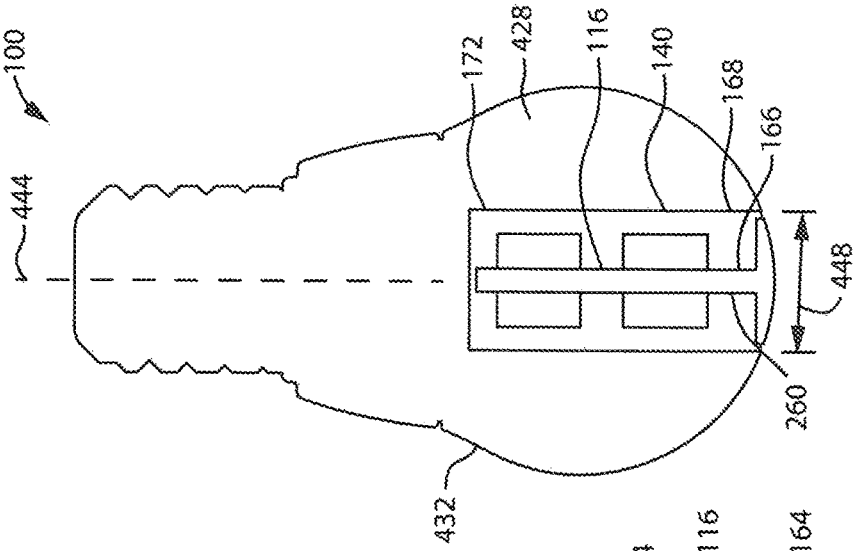


FIG. 80

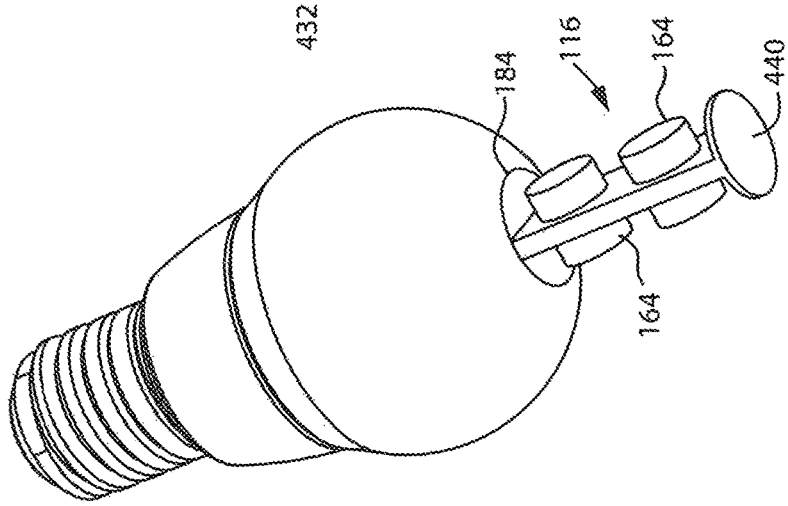


FIG. 79

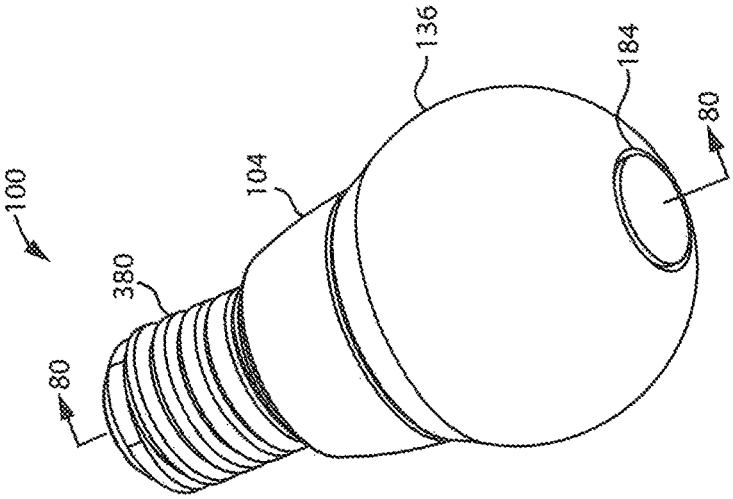


FIG. 78

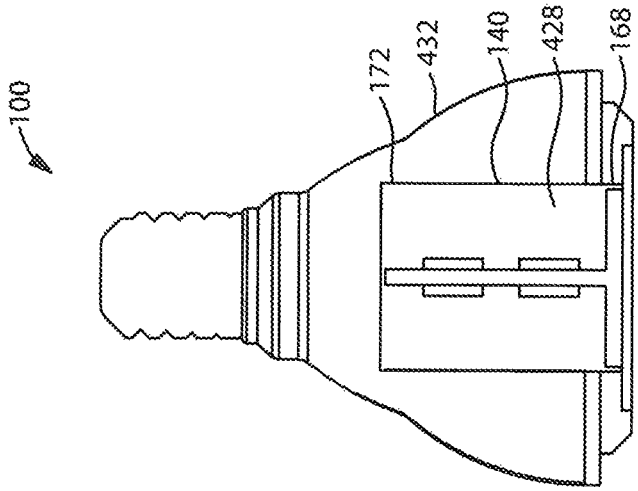


FIG. 83

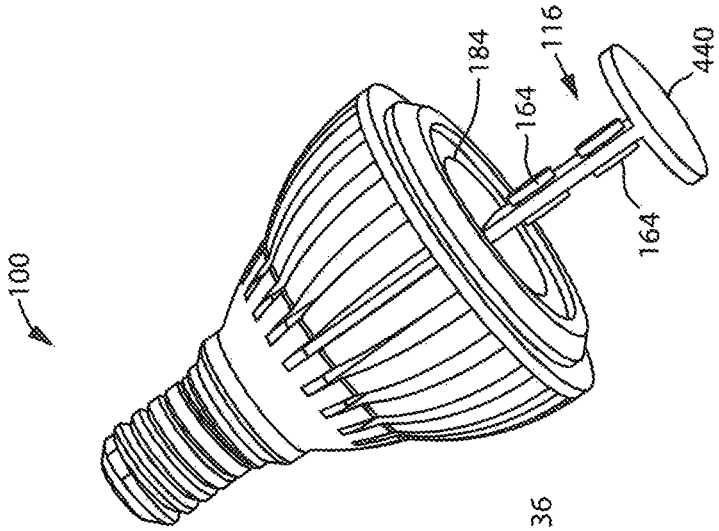


FIG. 82

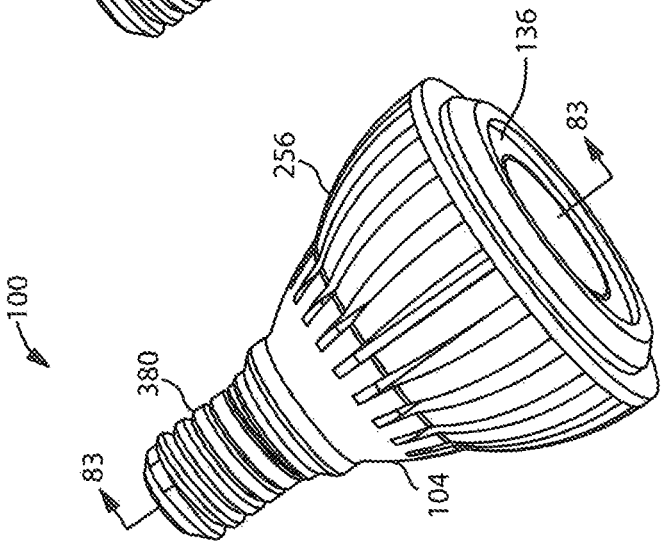


FIG. 81

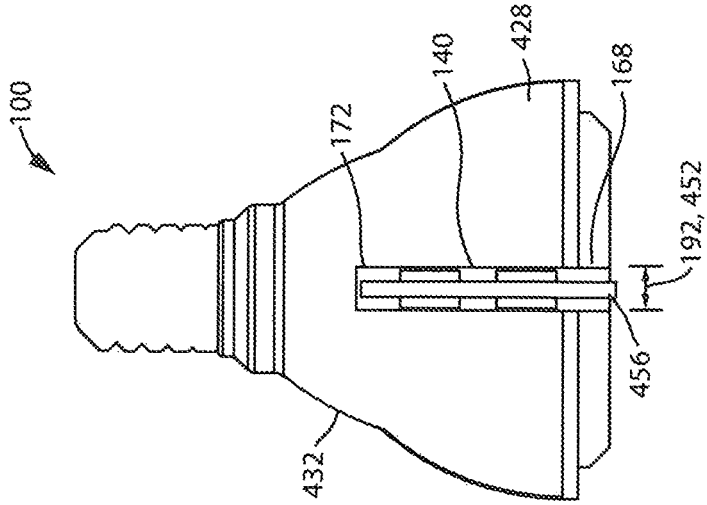


FIG. 86

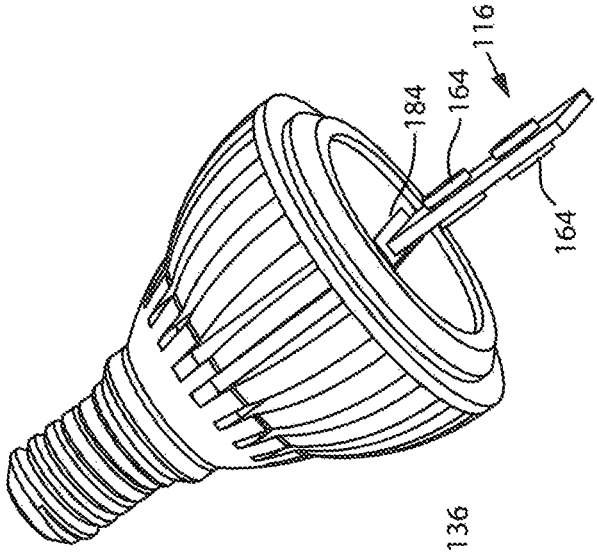


FIG. 85

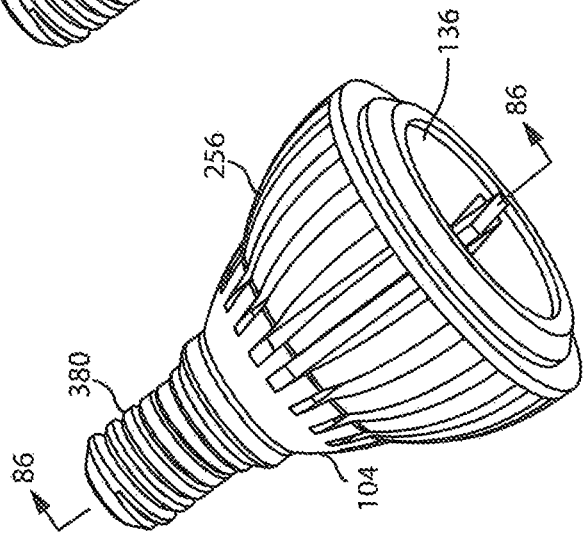


FIG. 84

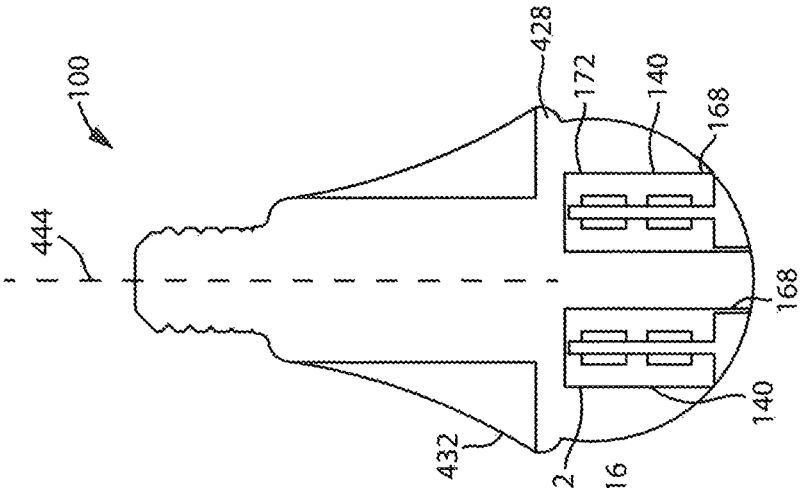


FIG. 89

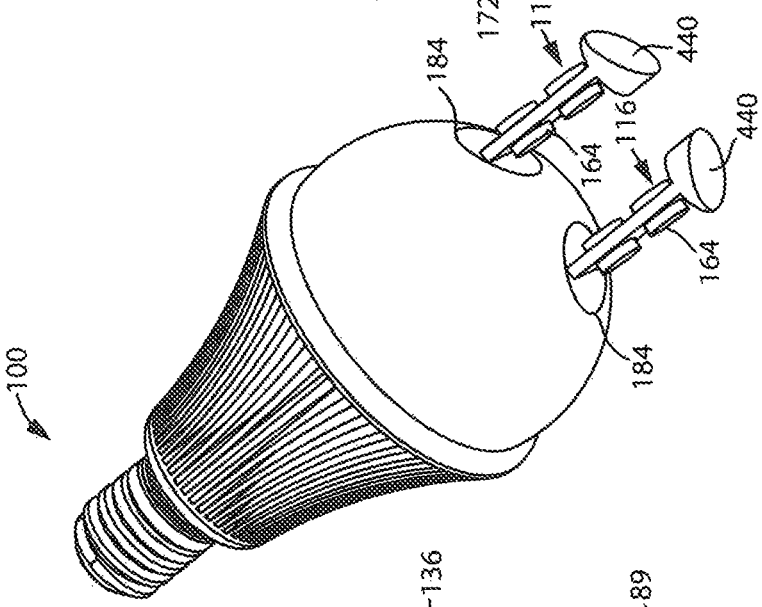


FIG. 88

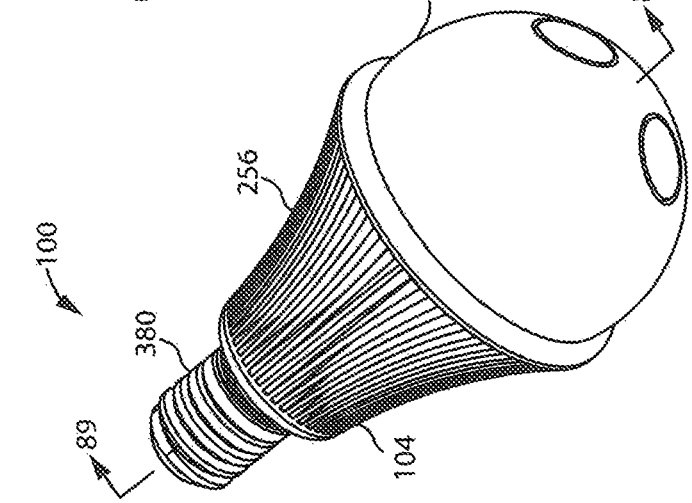


FIG. 87

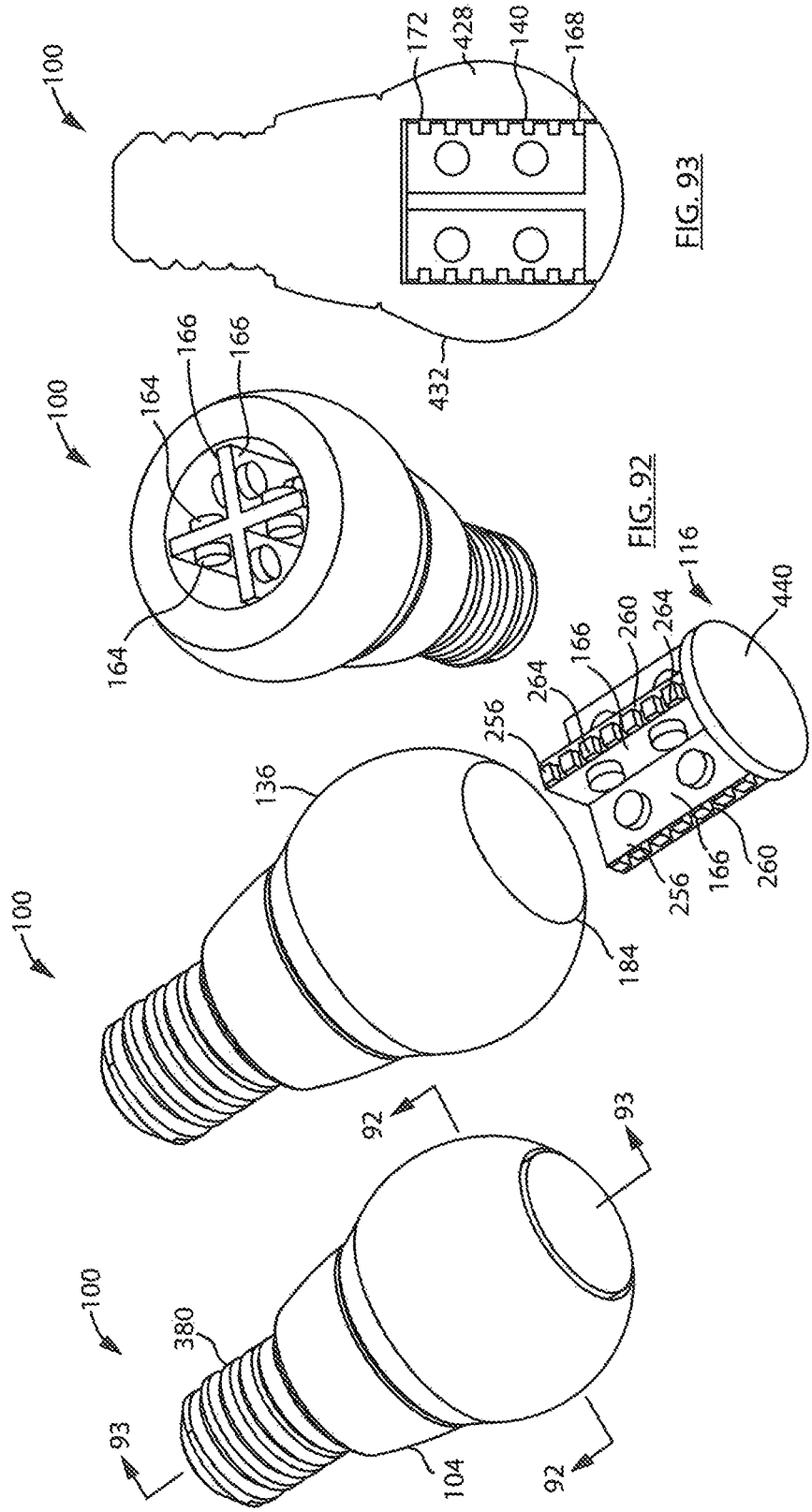


FIG. 93

FIG. 92

FIG. 91

FIG. 90

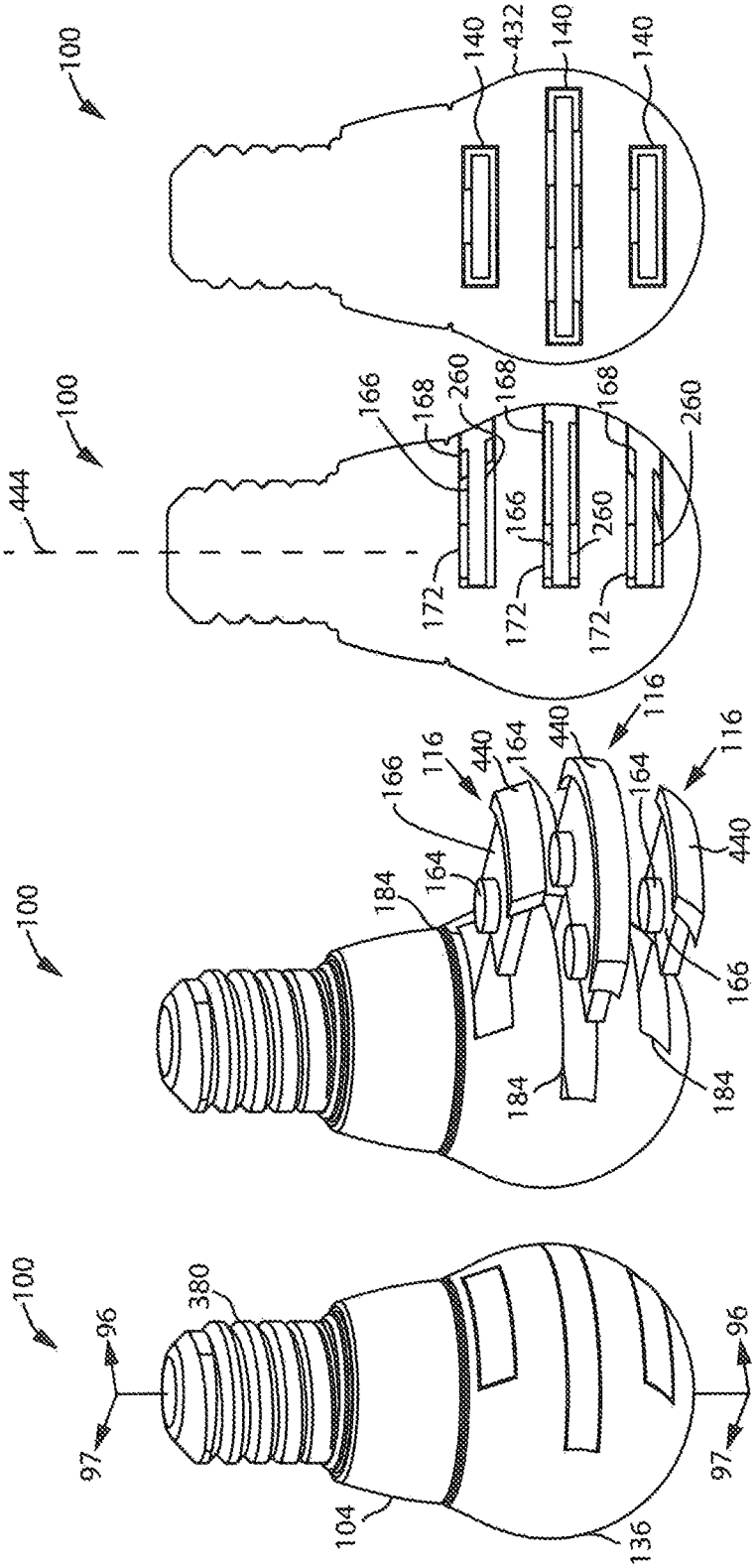


FIG. 94

FIG. 95

FIG. 96

FIG. 97

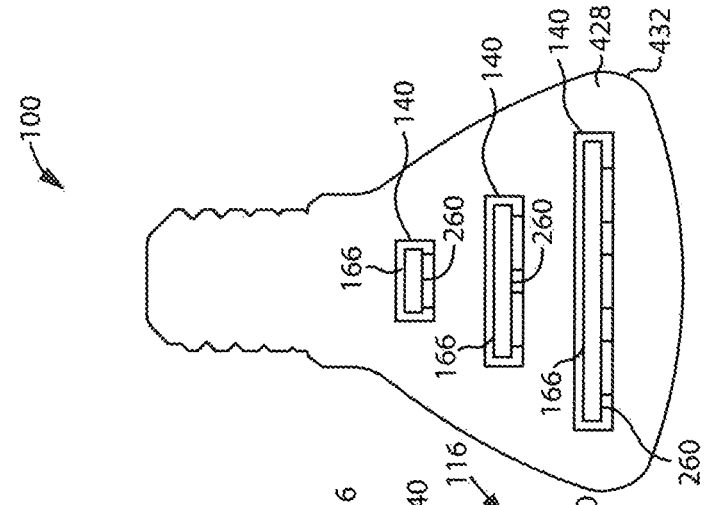


FIG. 100

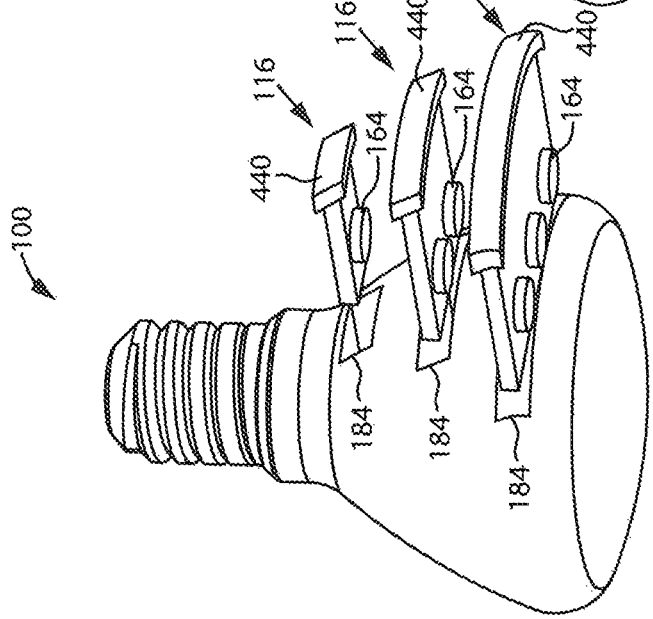


FIG. 99

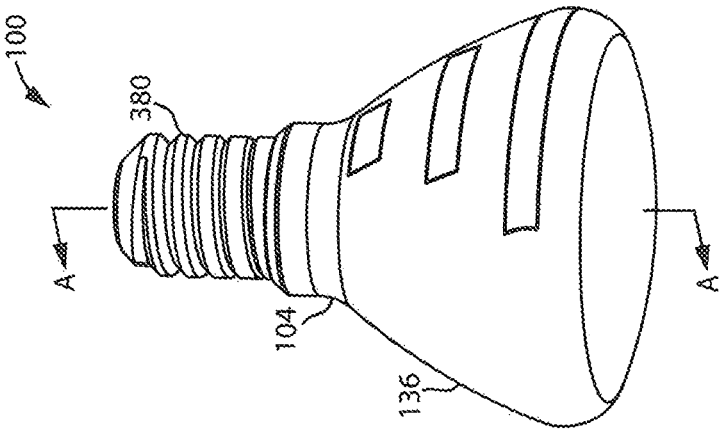


FIG. 98

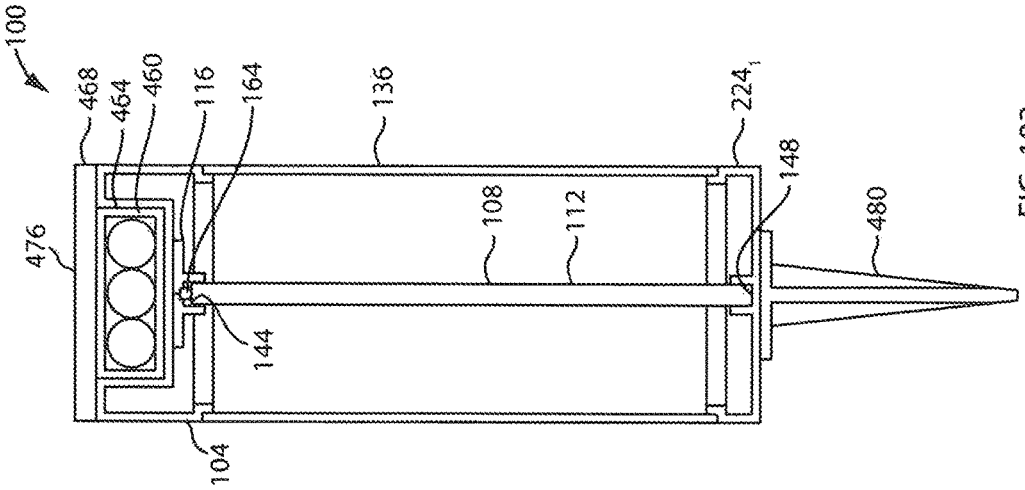


FIG. 102

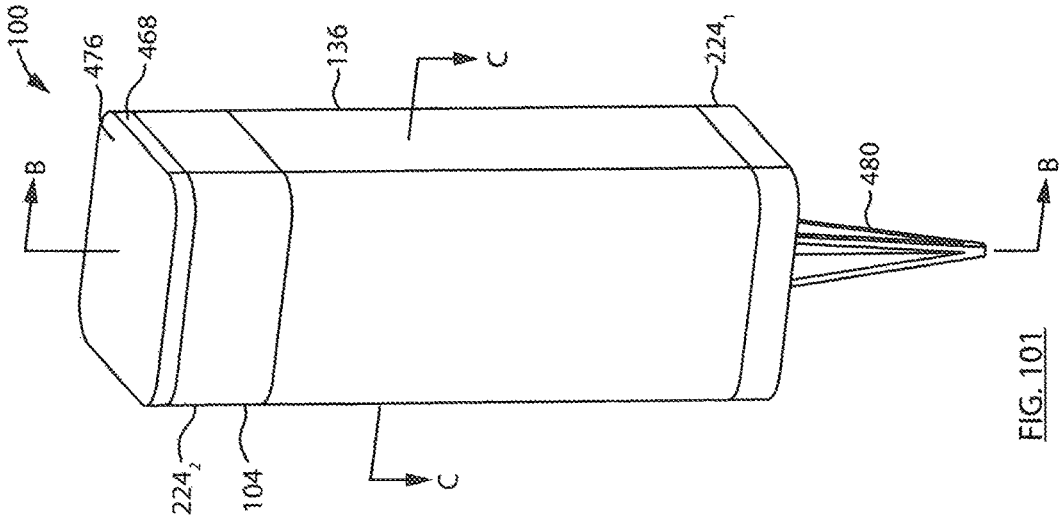


FIG. 101

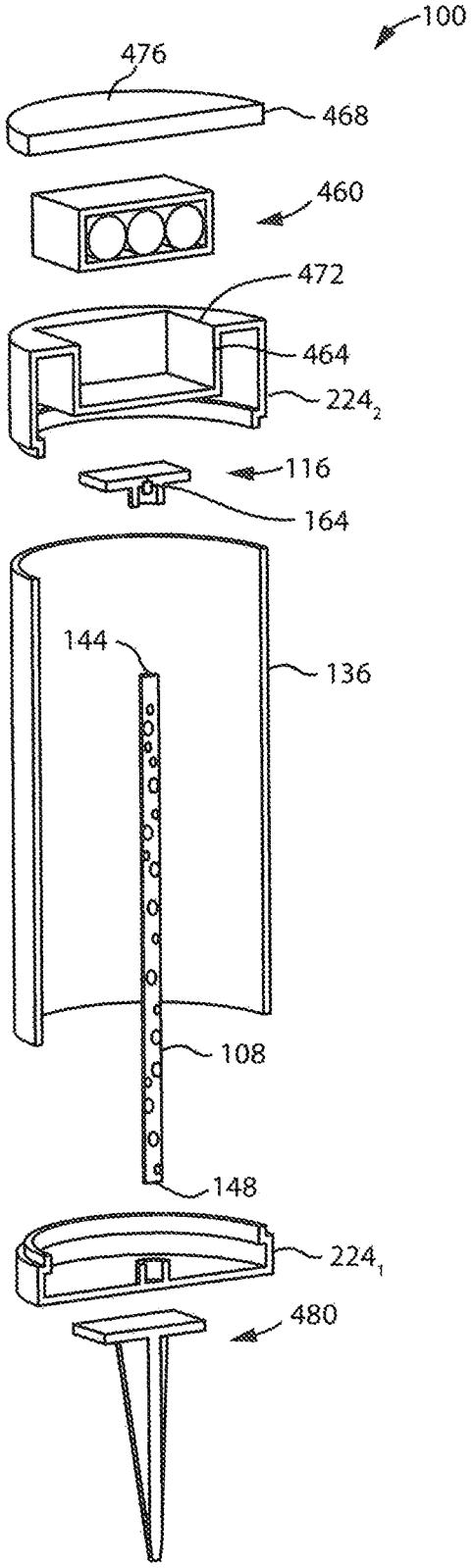


FIG. 103

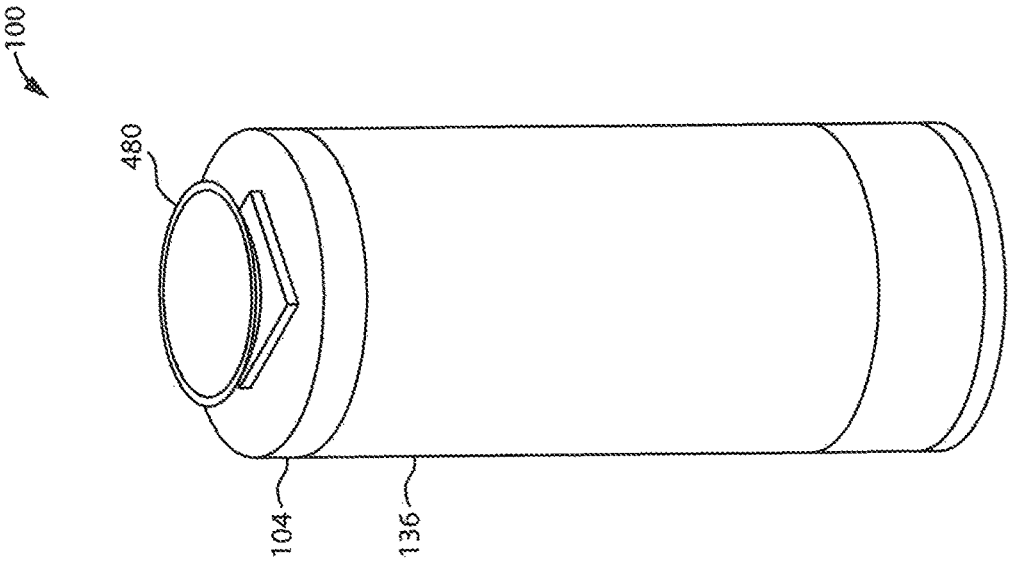


FIG. 104

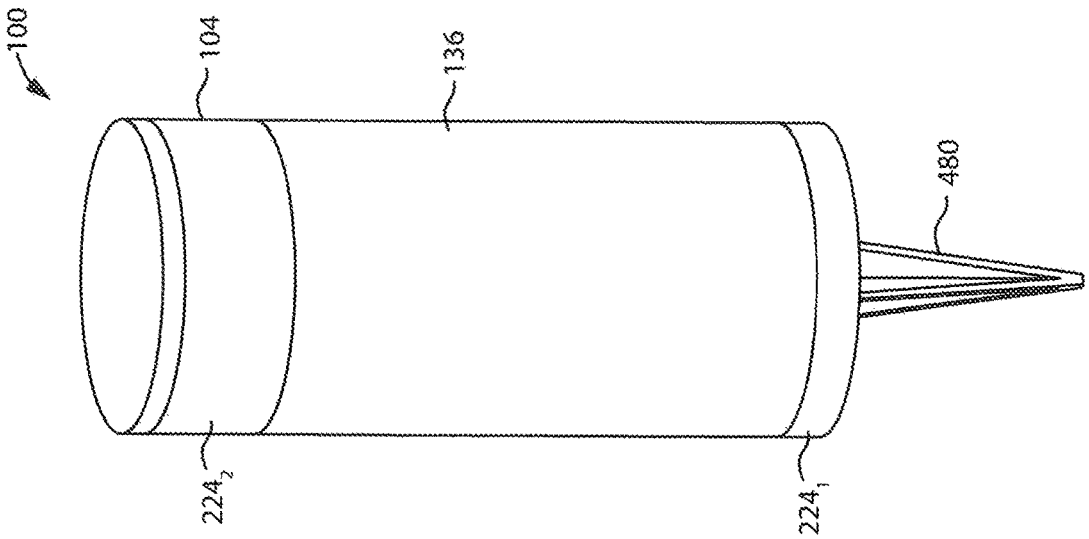


FIG. 105

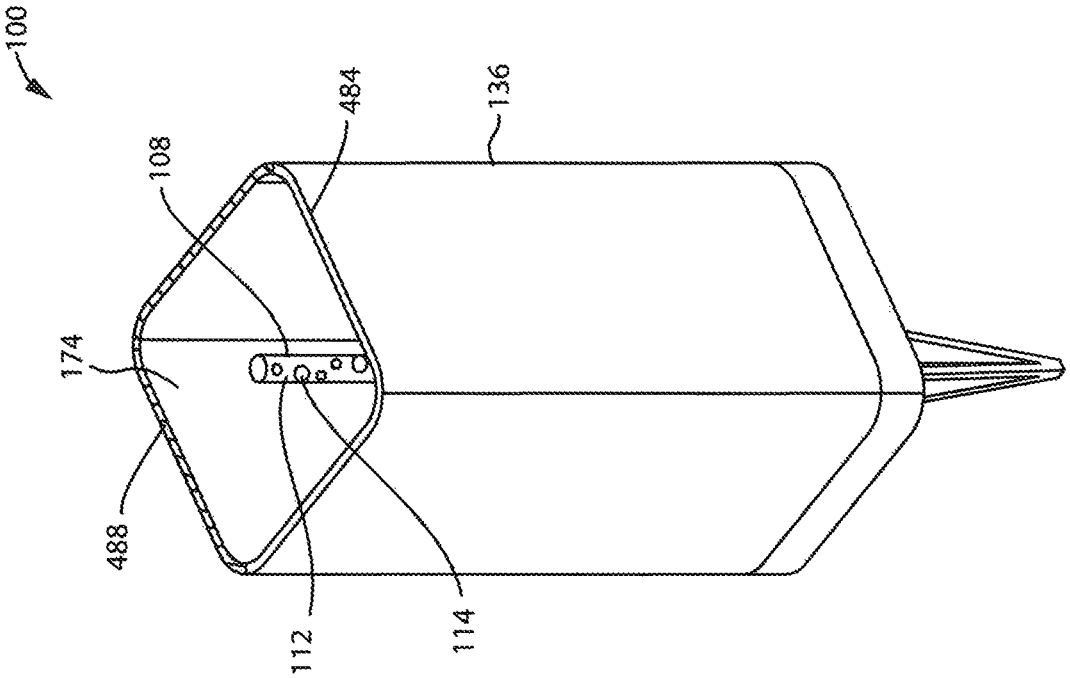


FIG. 106

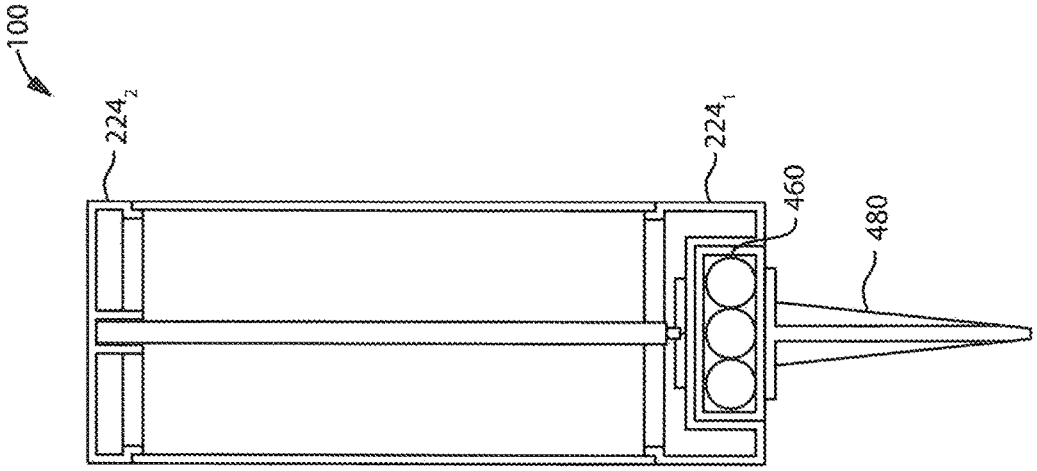


FIG. 107

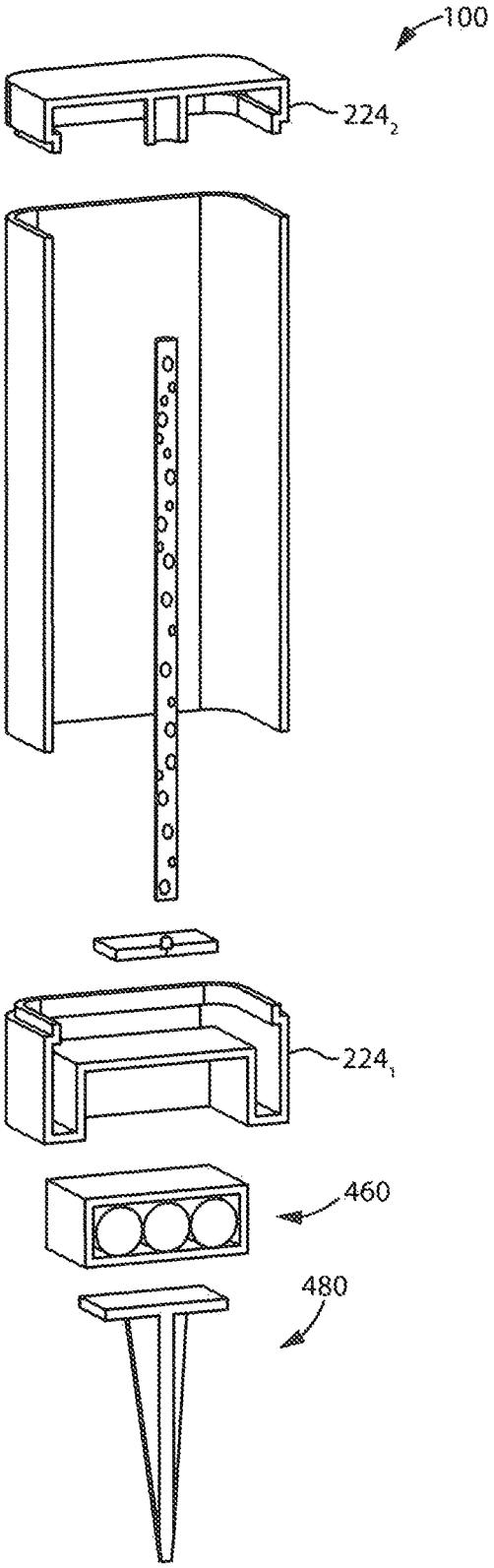


FIG. 108

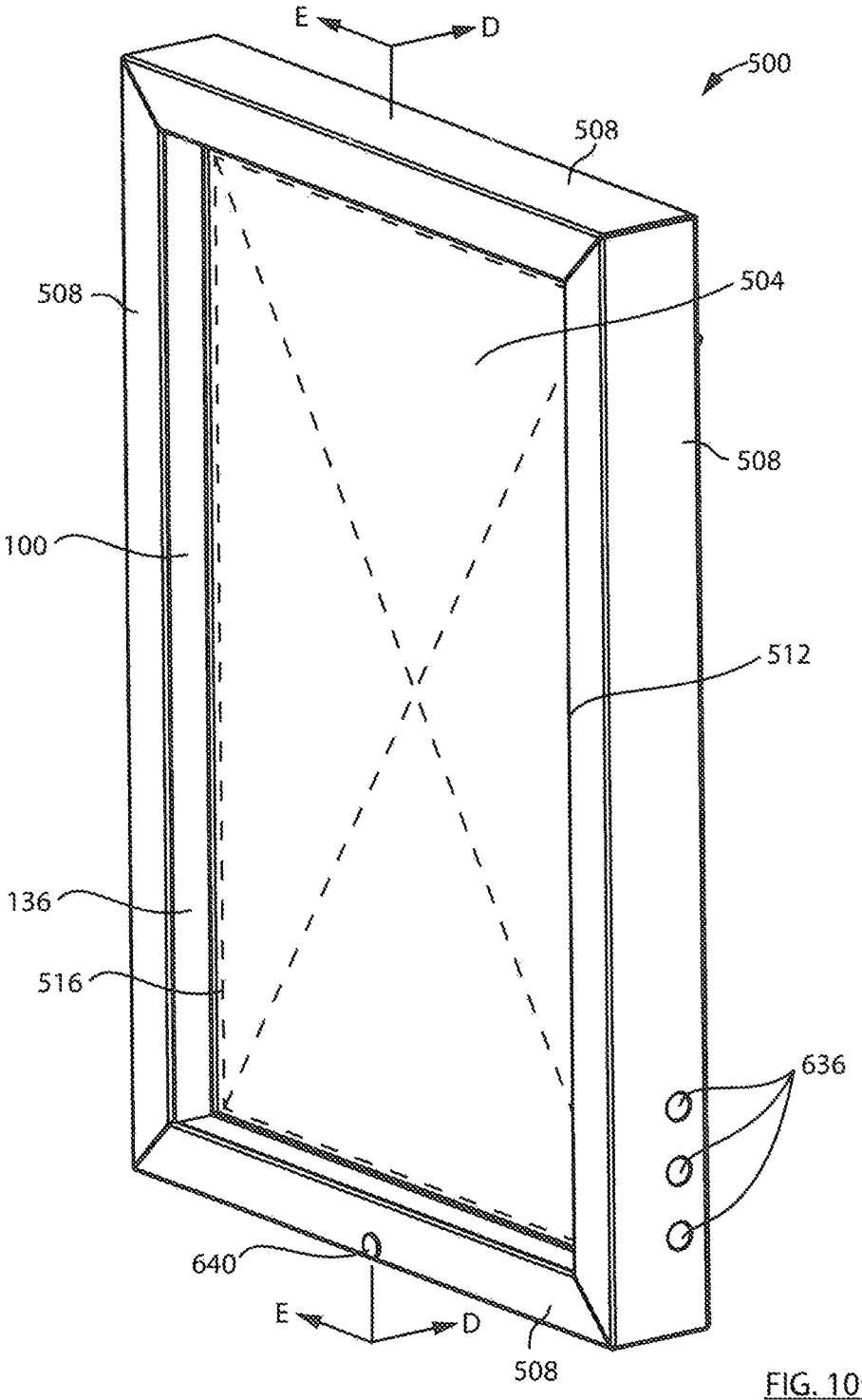


FIG. 109

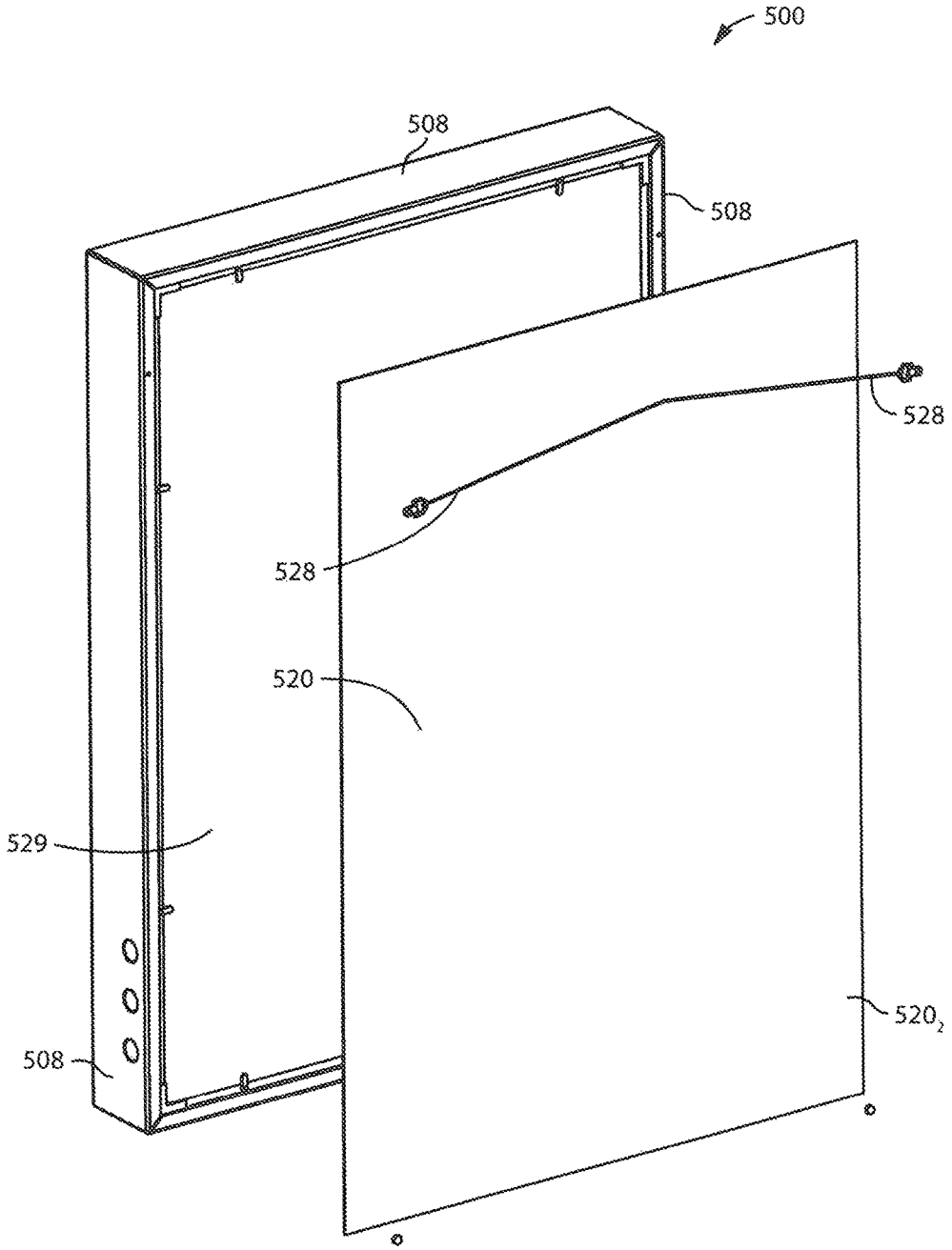


FIG. 110

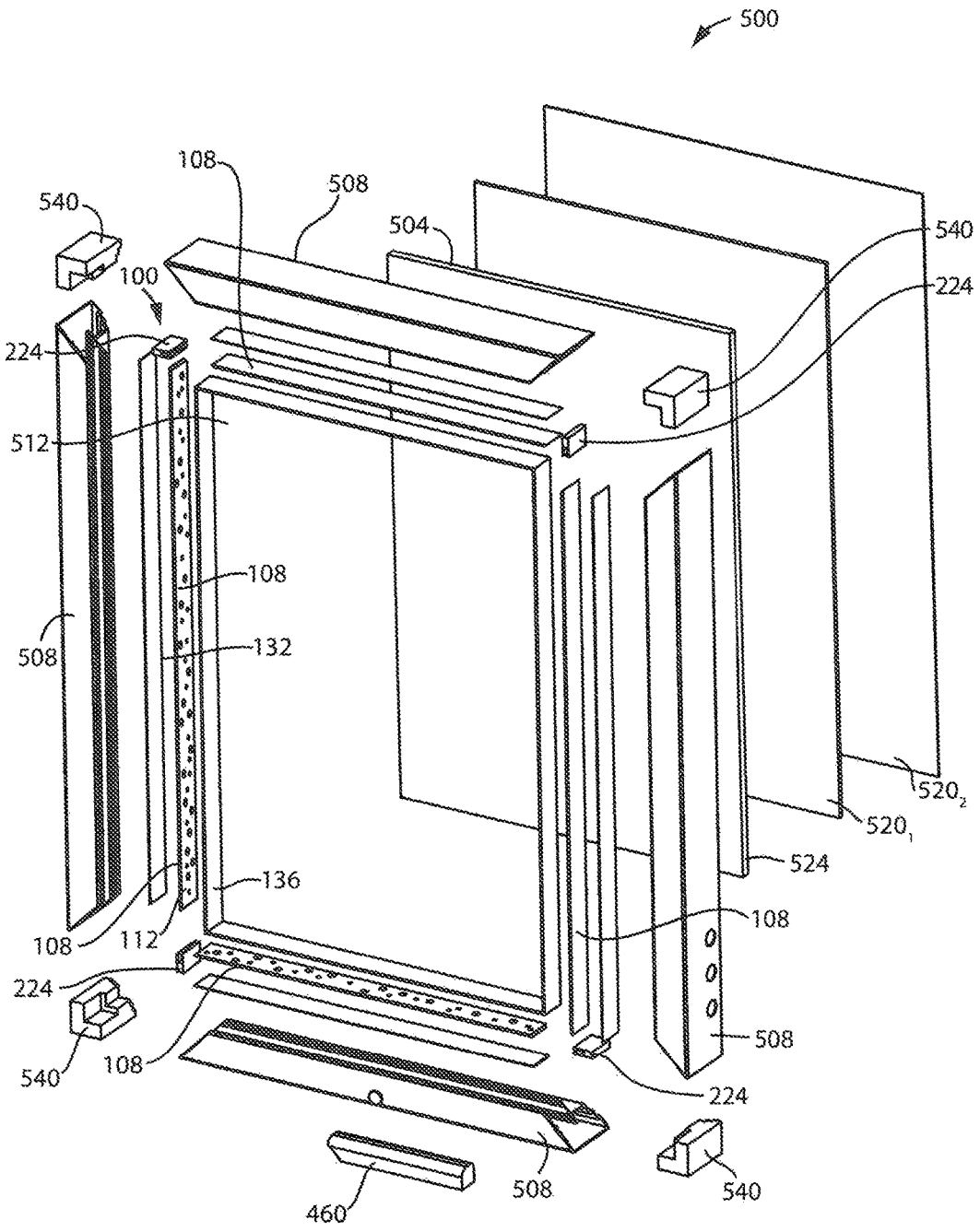
500
108
508
504
540
100
224
512
108
132
508
136
112
108
224
540
108
540
224
520₂
520₁
524
108
508
224
508
460
540

FIG. 111

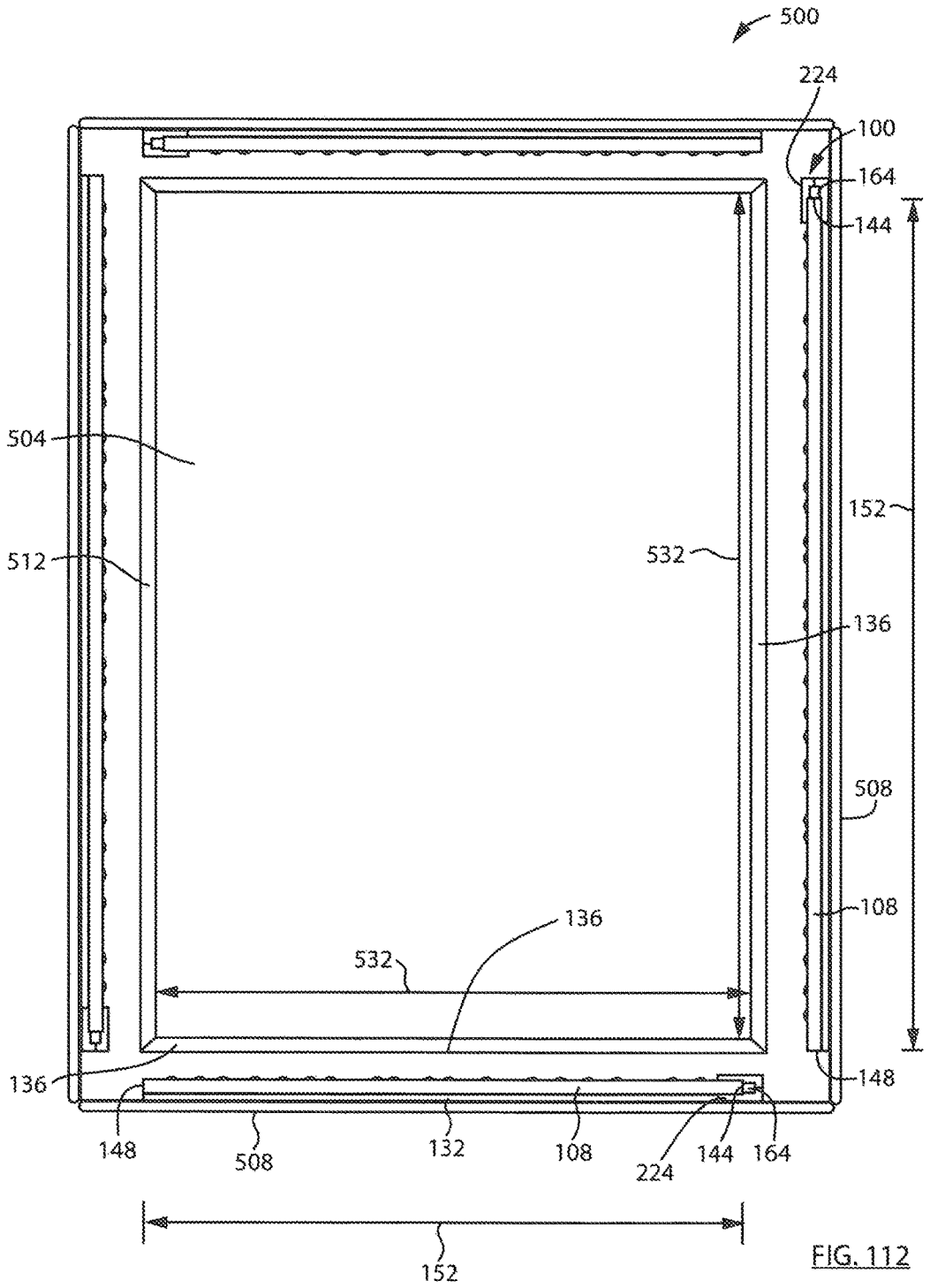
500
224
100
164
144
504
152
512
532
136
508
108
136
532
136
148
148
508
132
108
224
144
164
152

FIG. 112

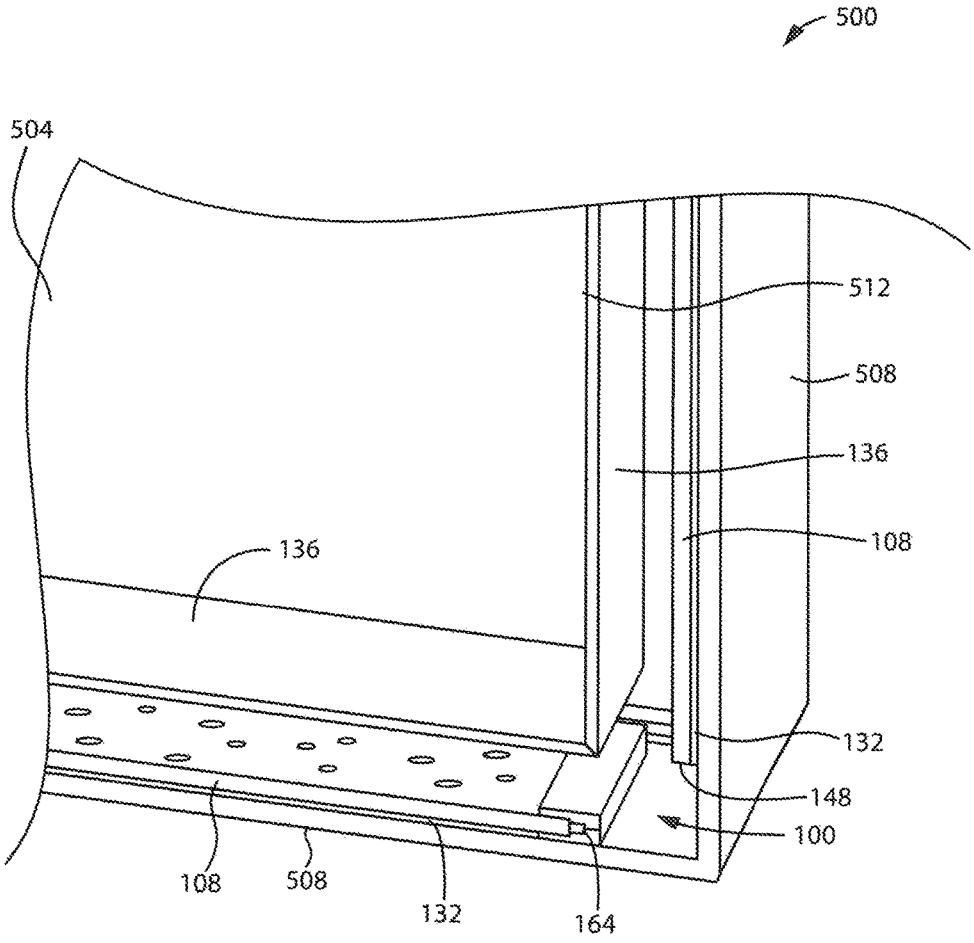


FIG. 113A

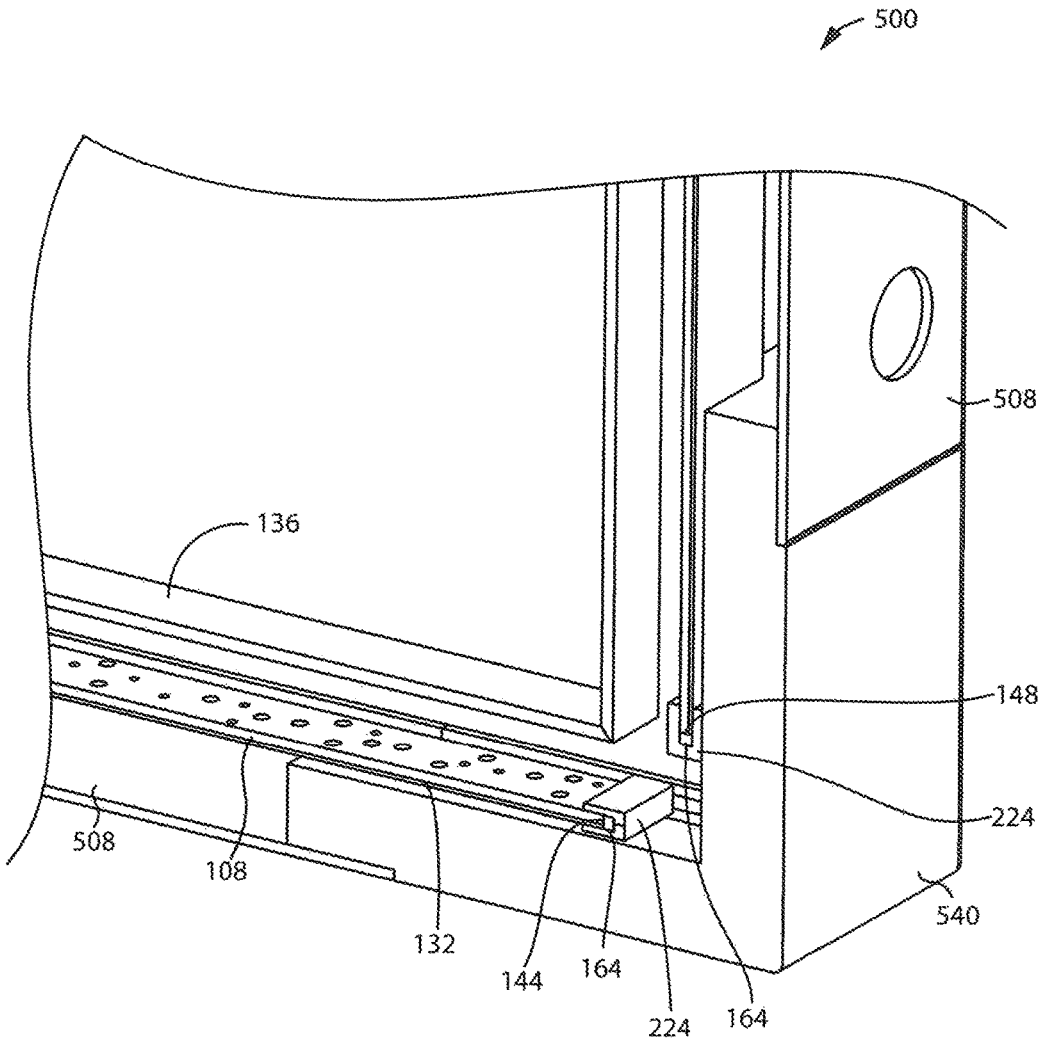


FIG. 113B

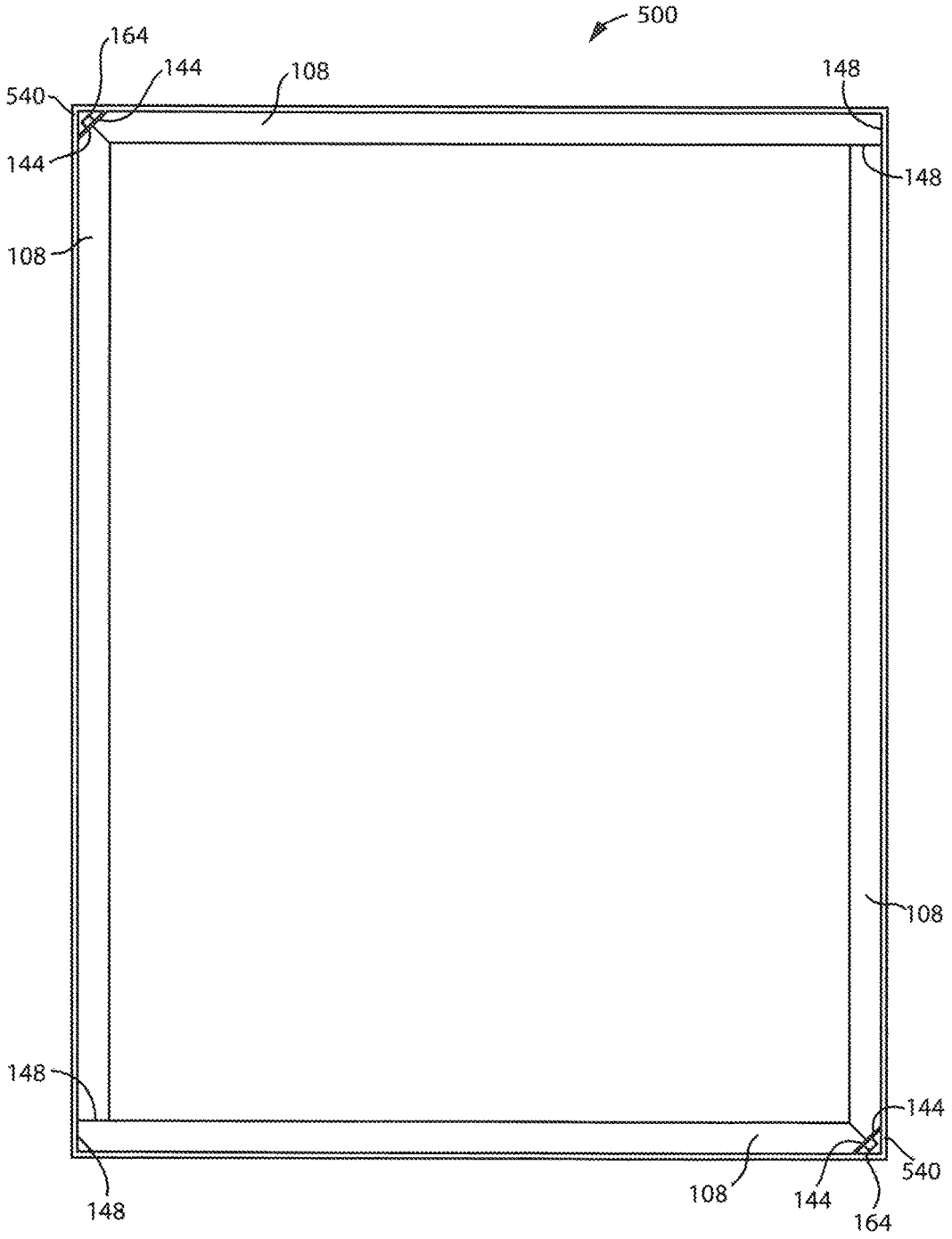
500
164
144
108
148
540
144
148
108
108
148
144
540
148
108
144
164

FIG. 114

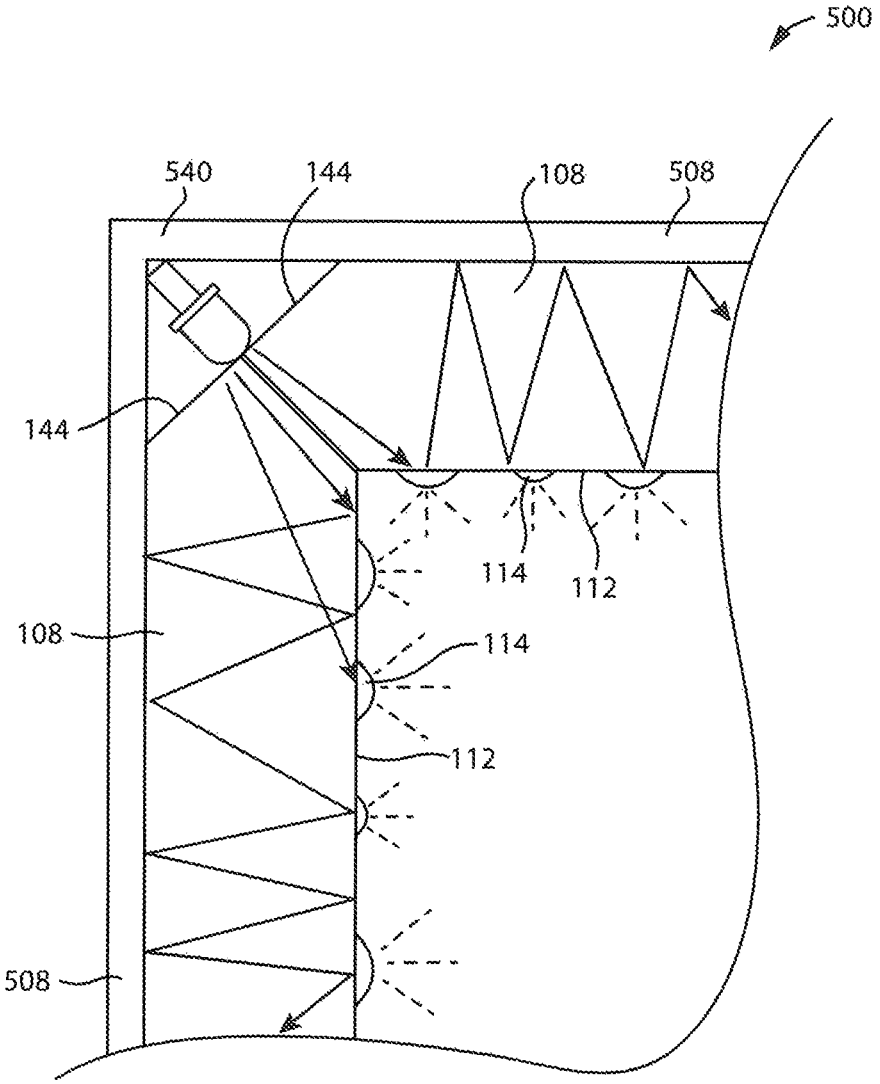


FIG. 115

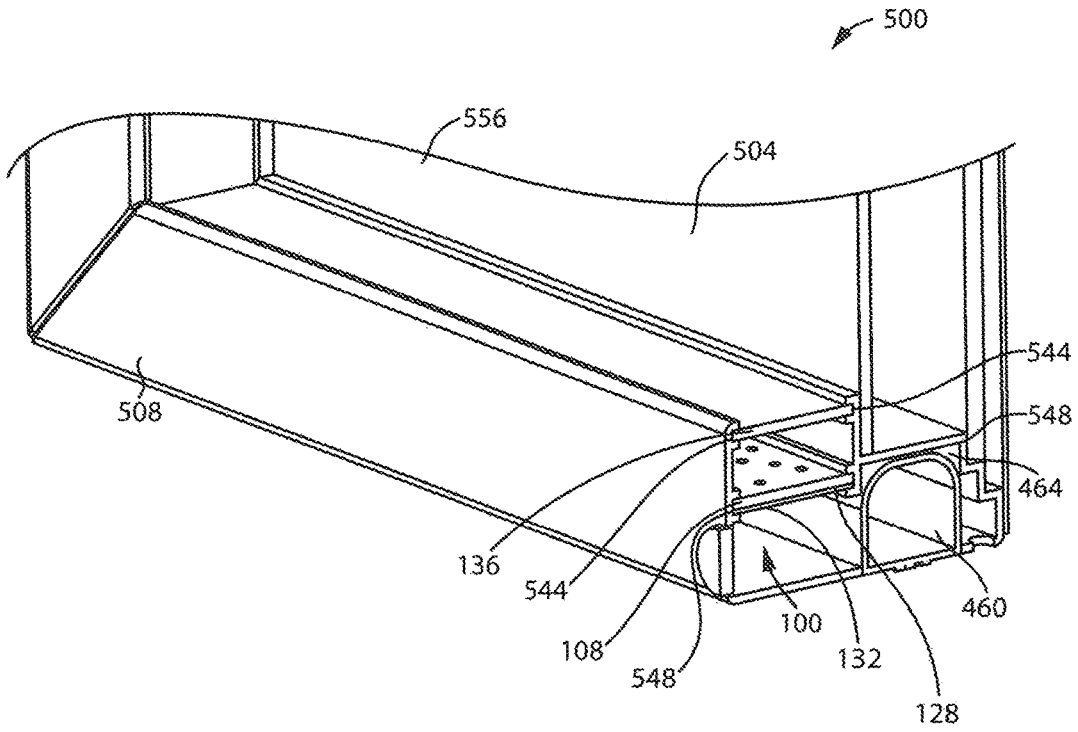


FIG. 116

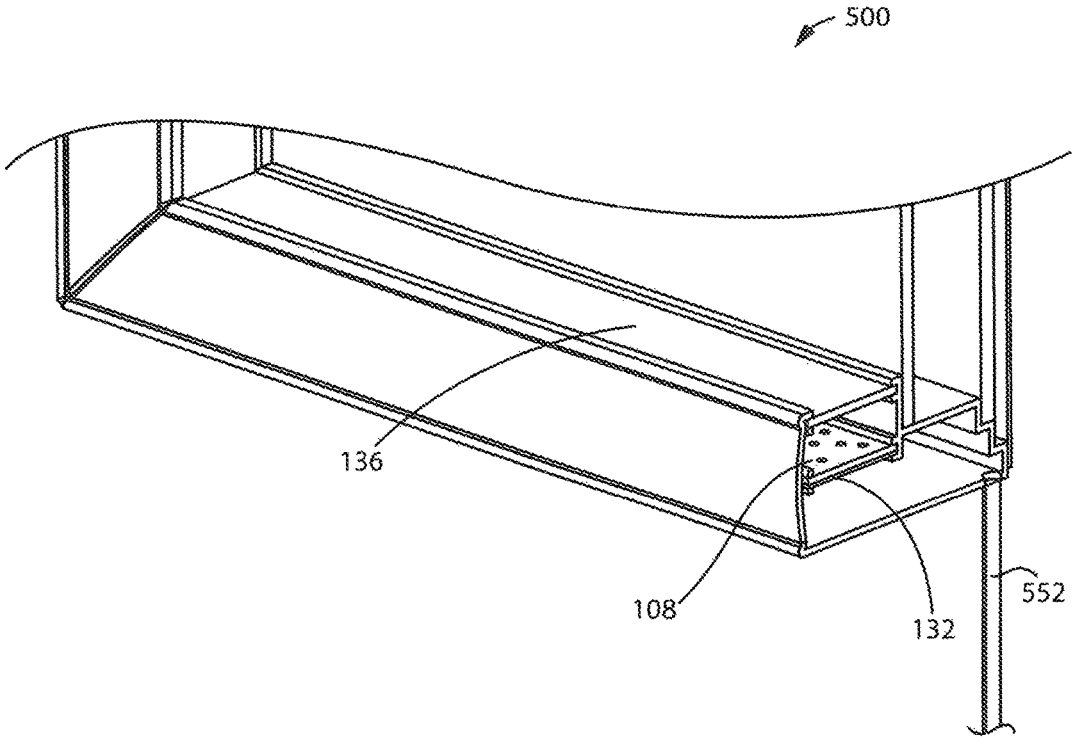


FIG. 117

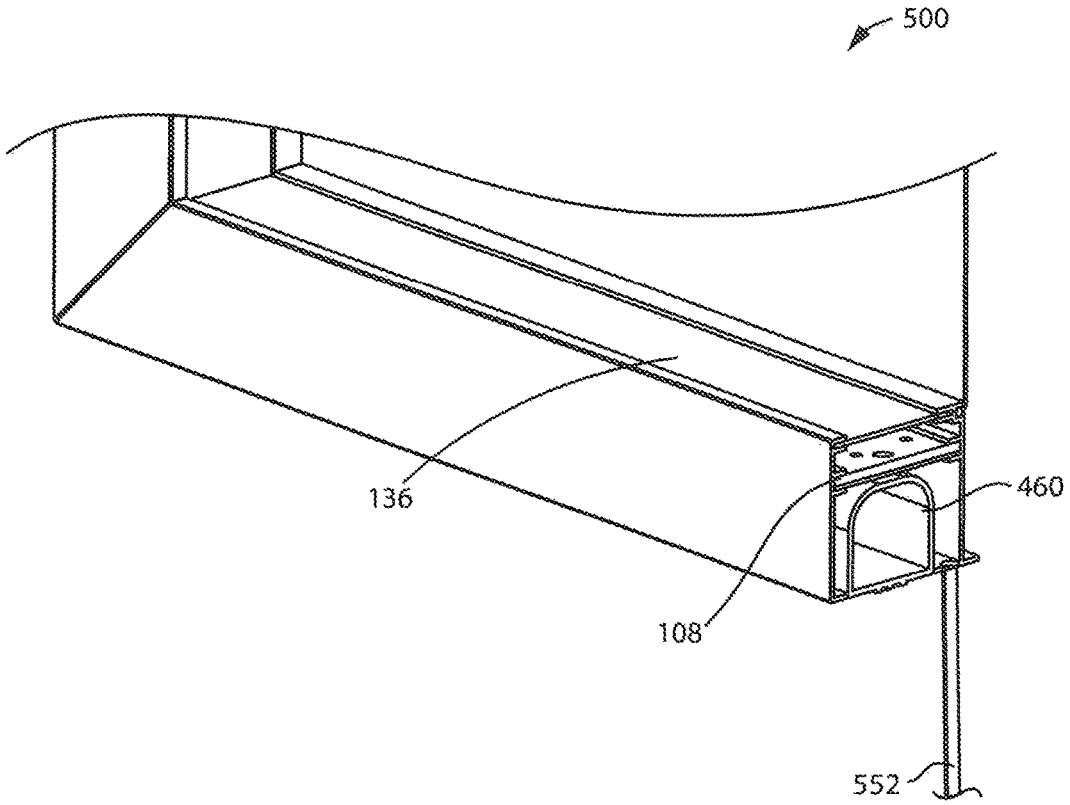


FIG. 118

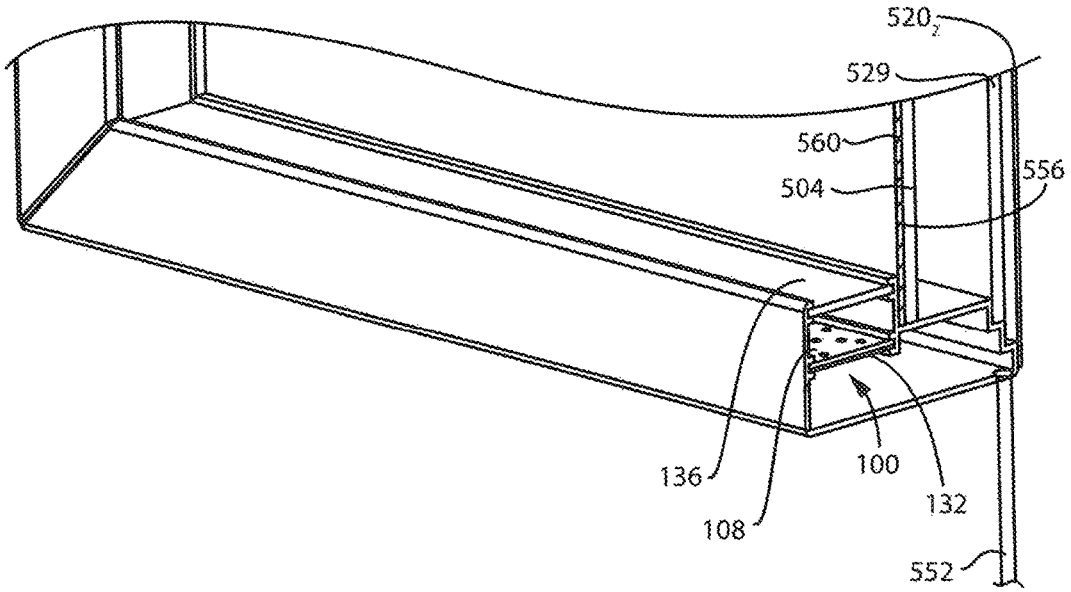


FIG. 119

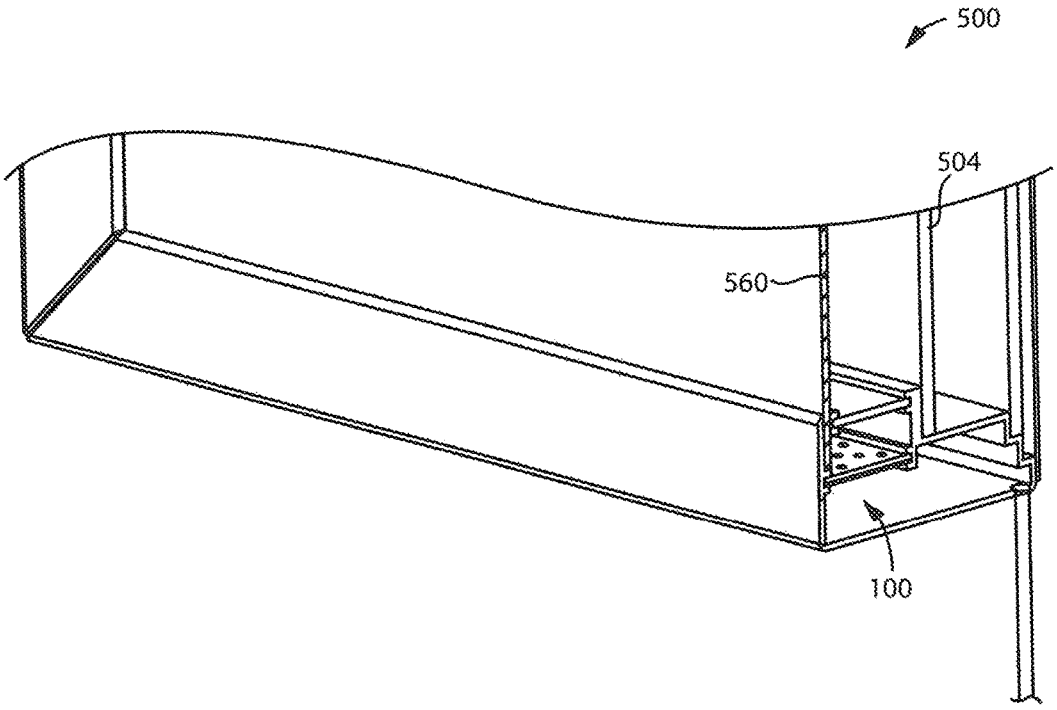


FIG. 120

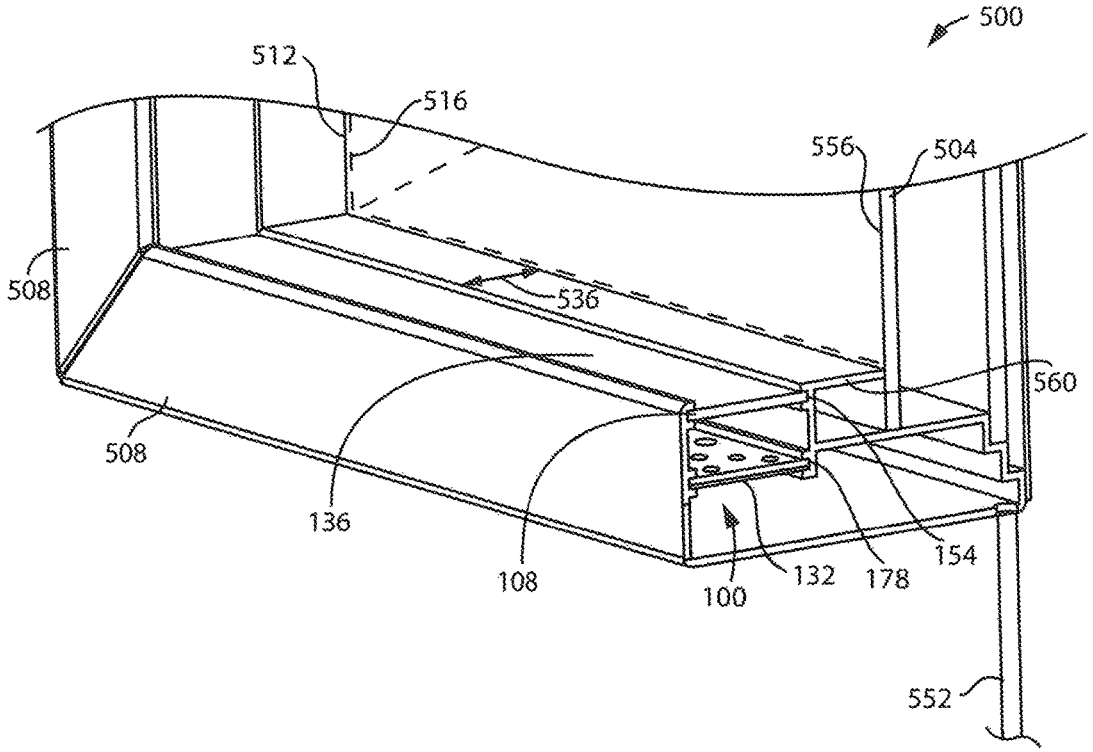


FIG. 121

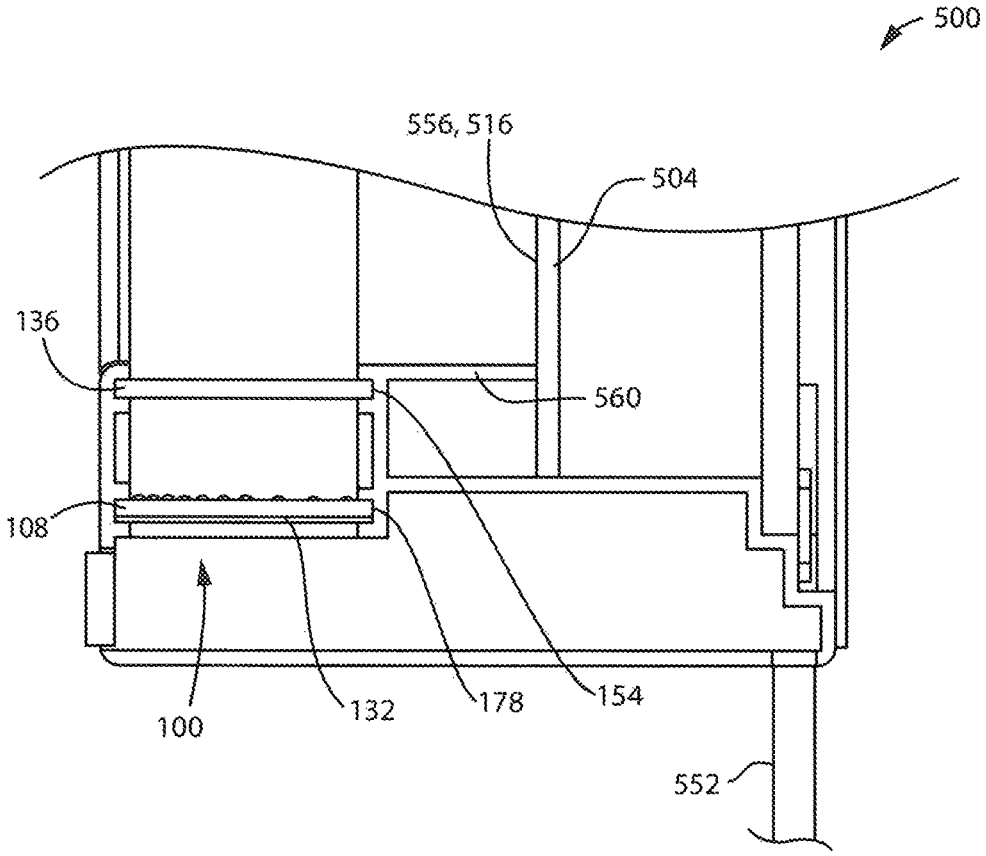


FIG. 122

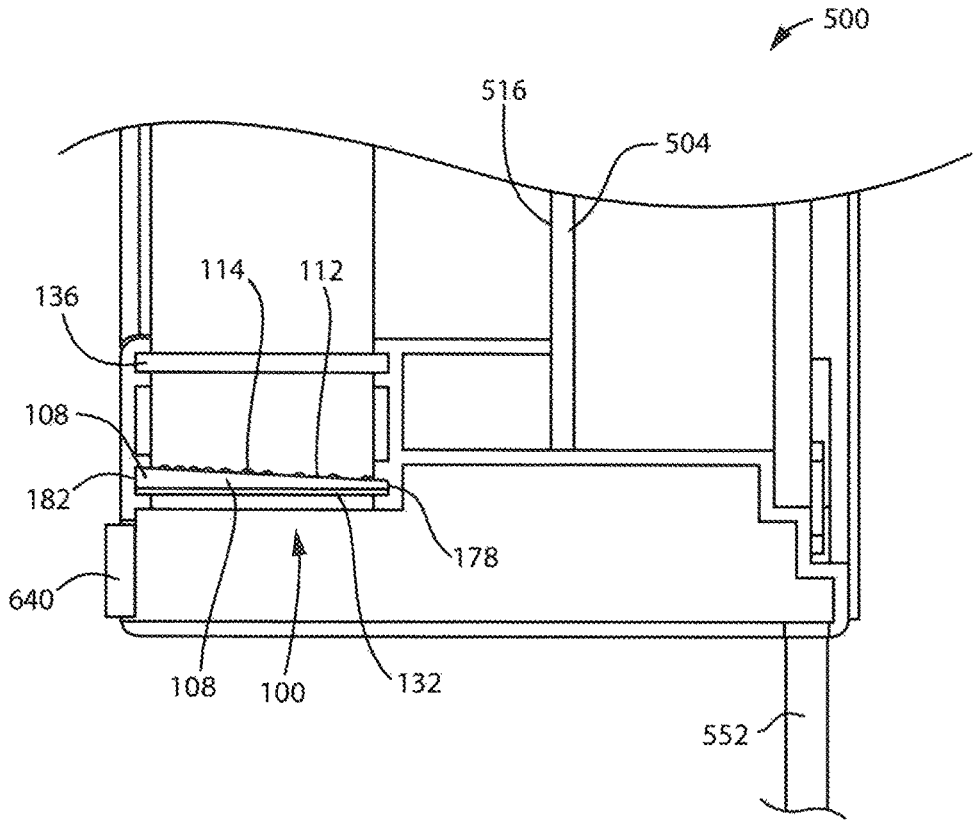


FIG. 123

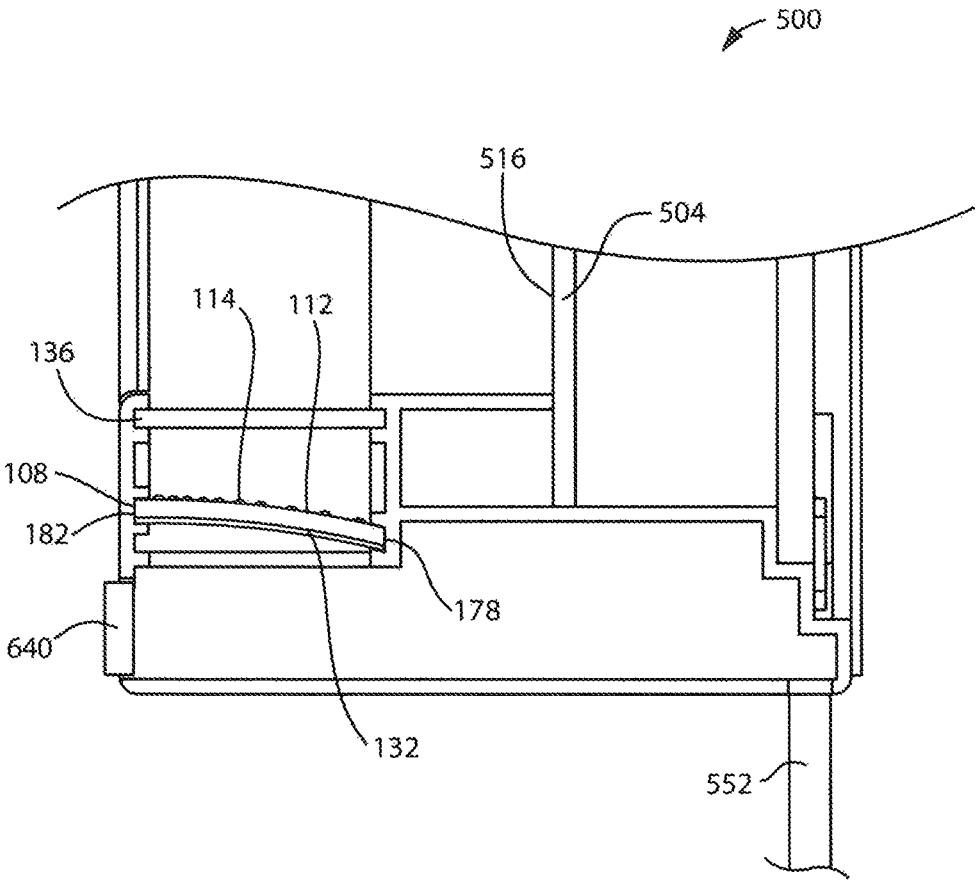


FIG. 124

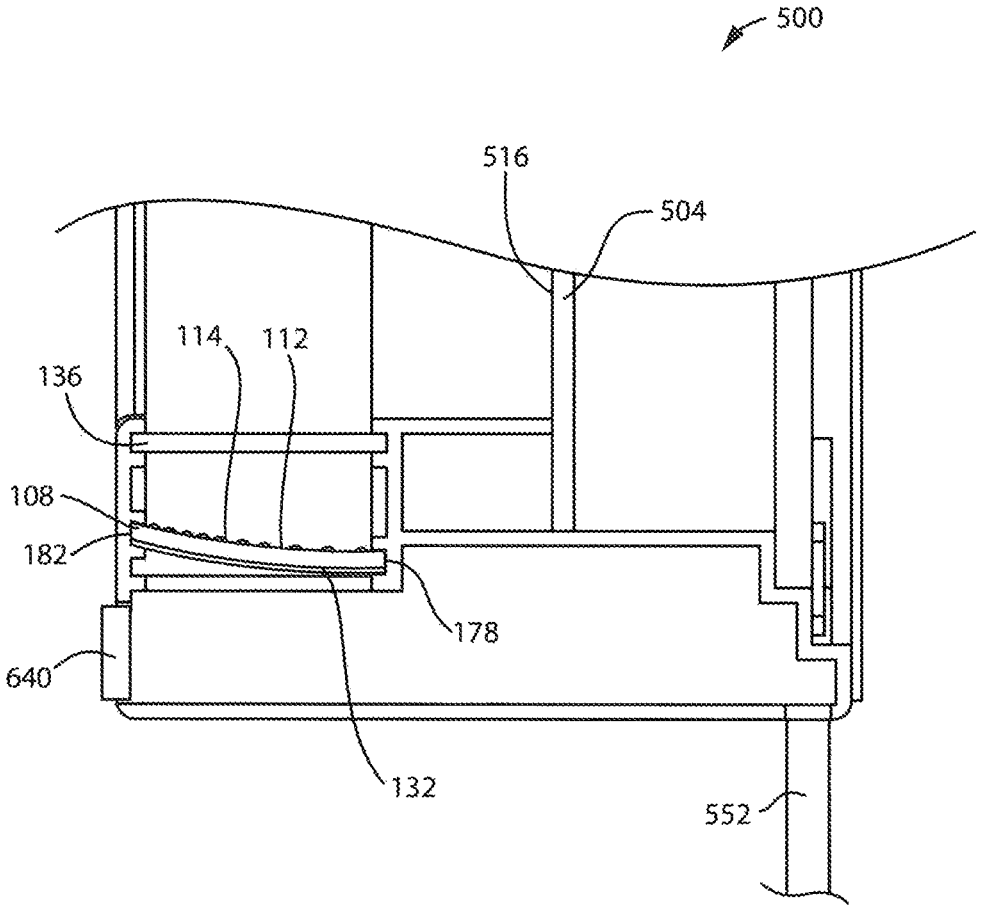


FIG. 125

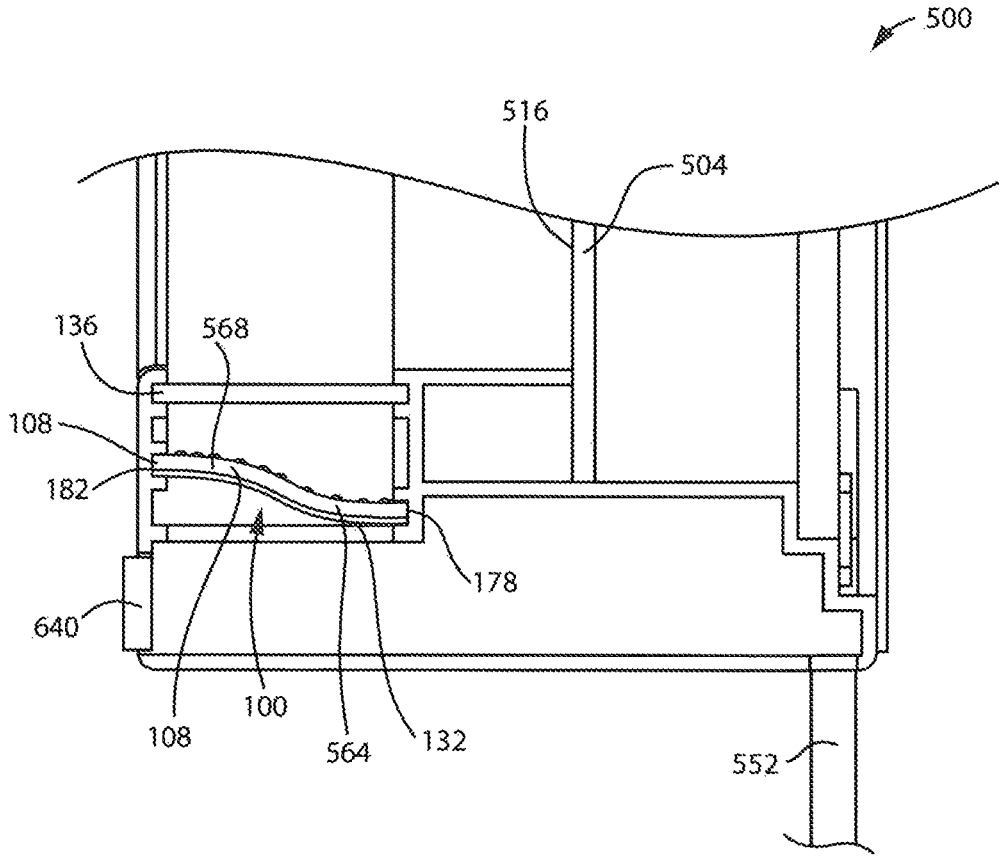


FIG. 126

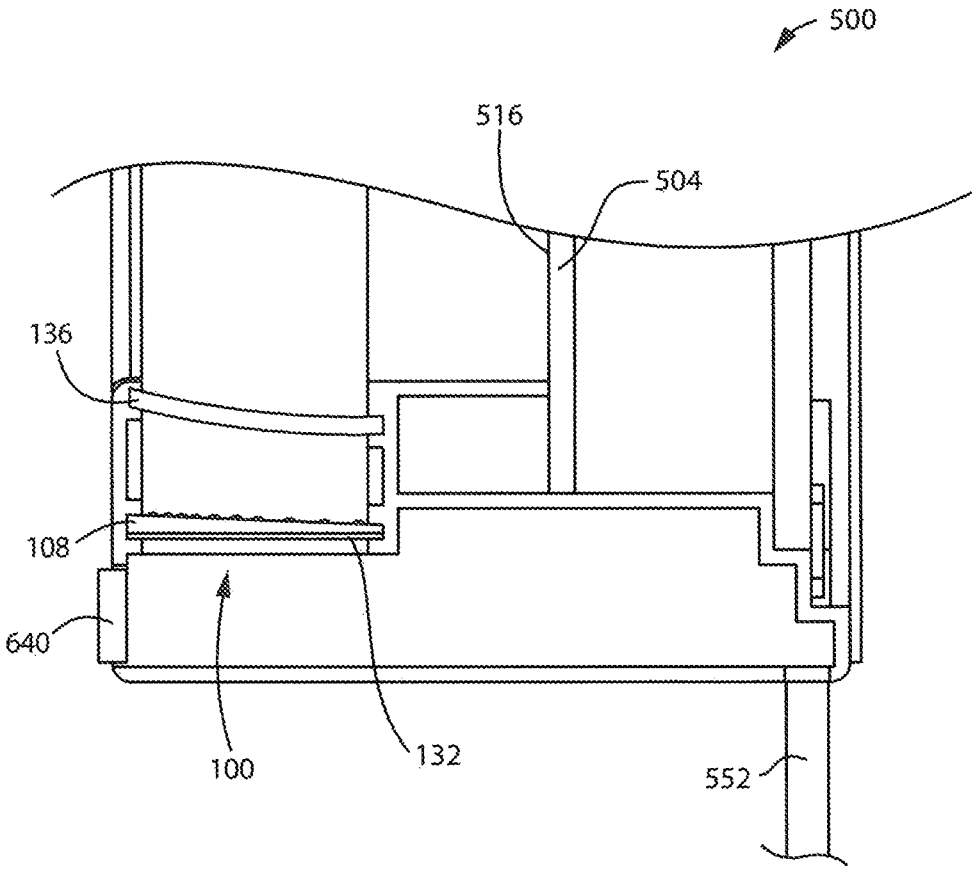


FIG. 127

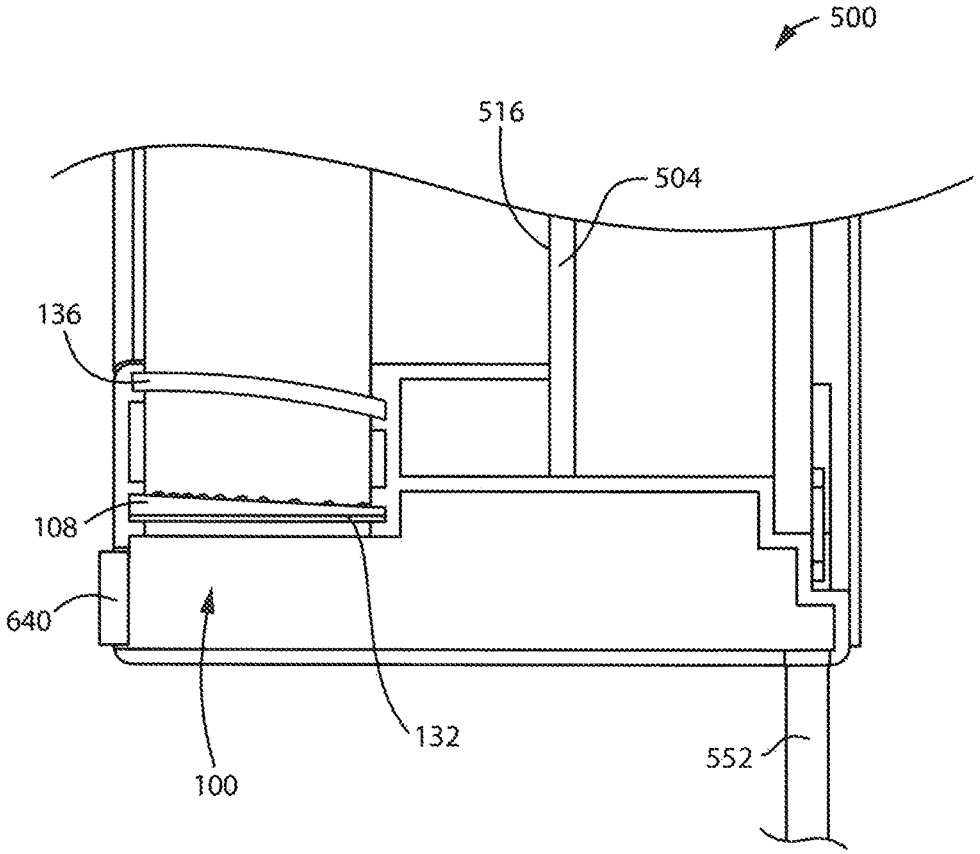


FIG. 128

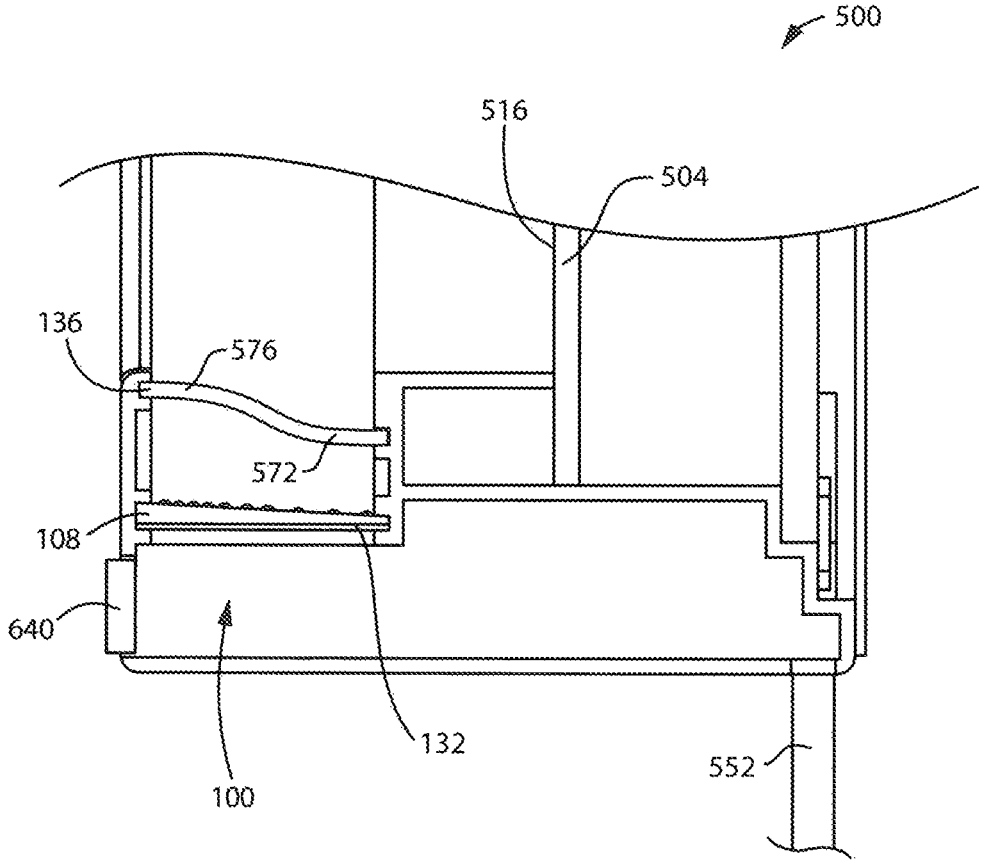


FIG. 129

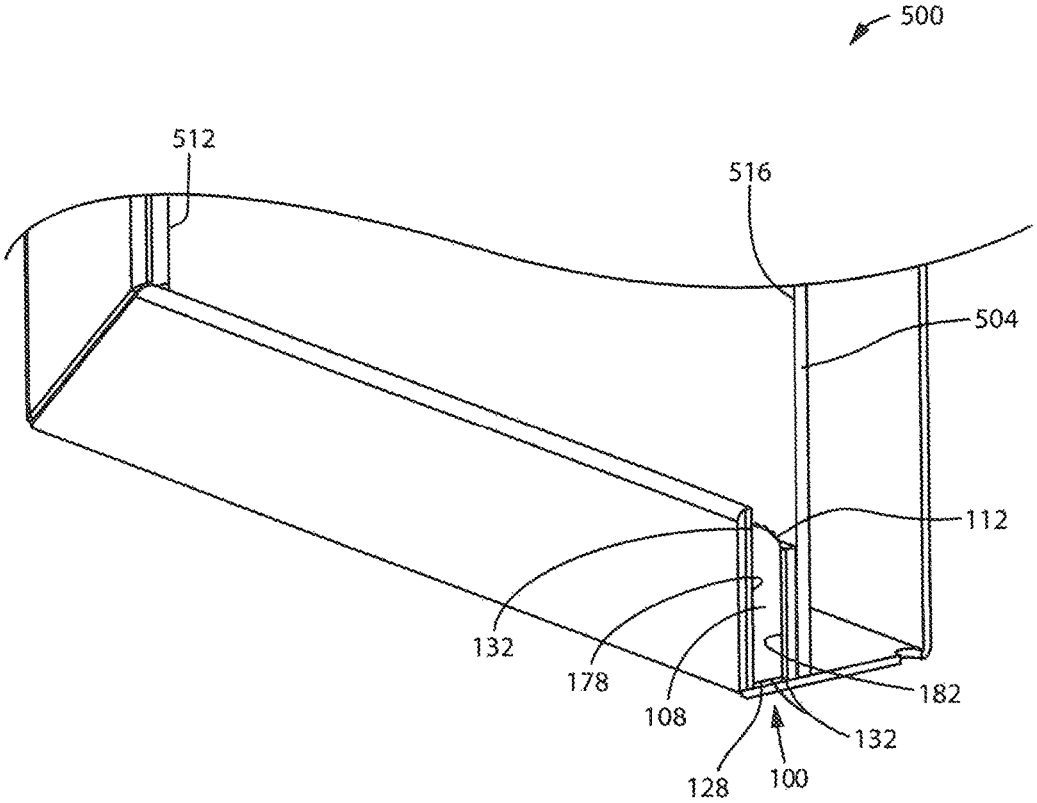


FIG. 130

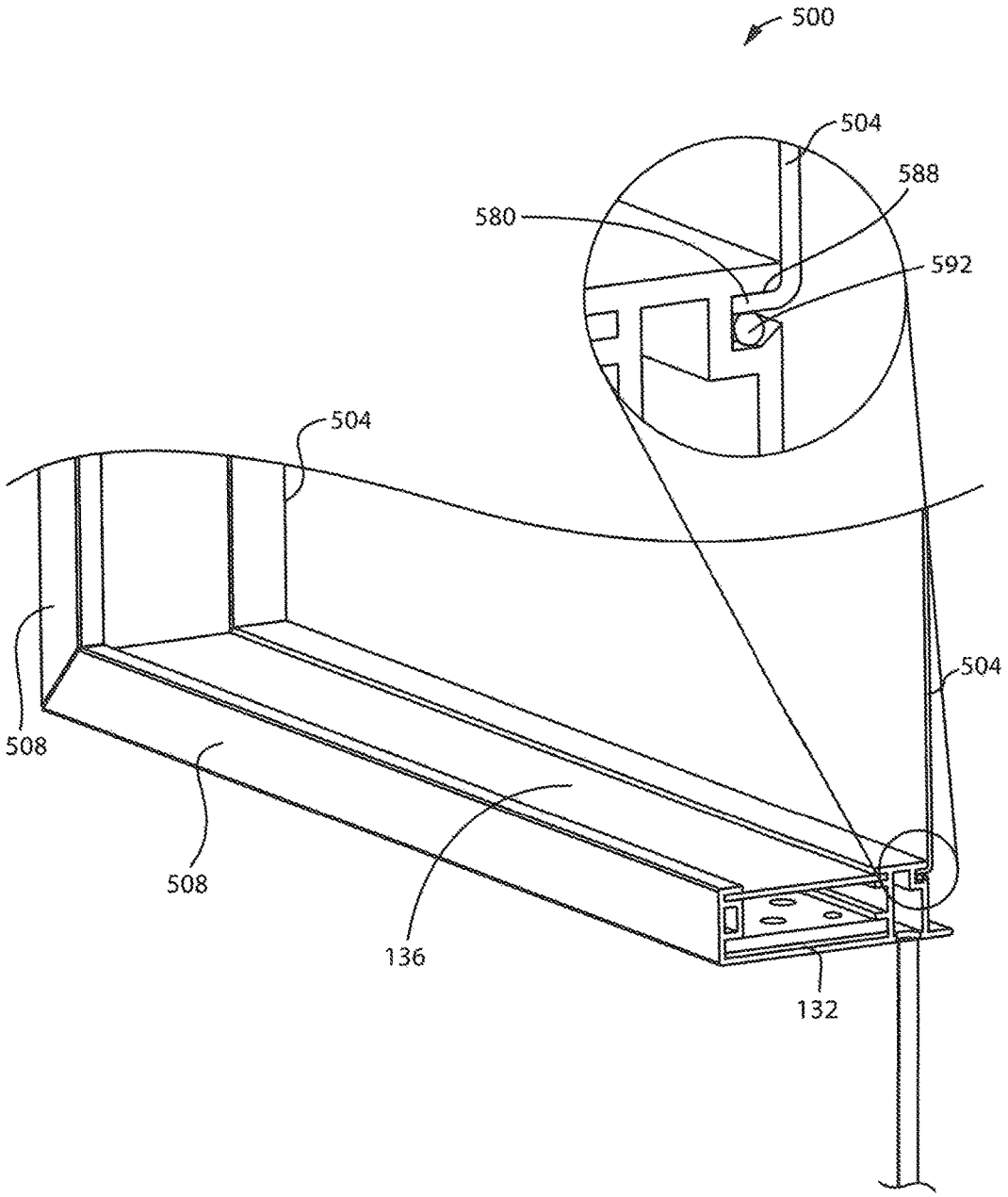


FIG. 131

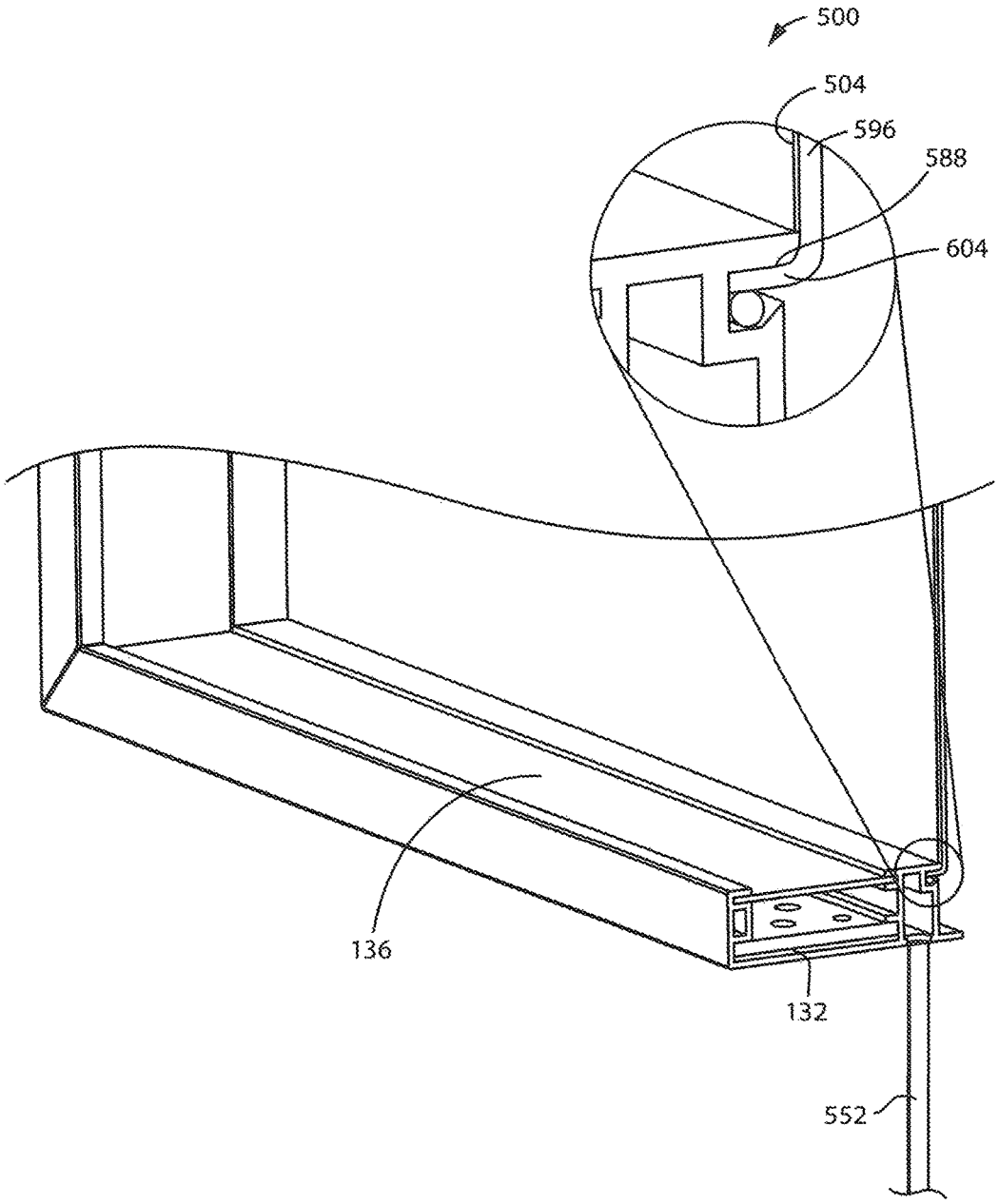


FIG. 132

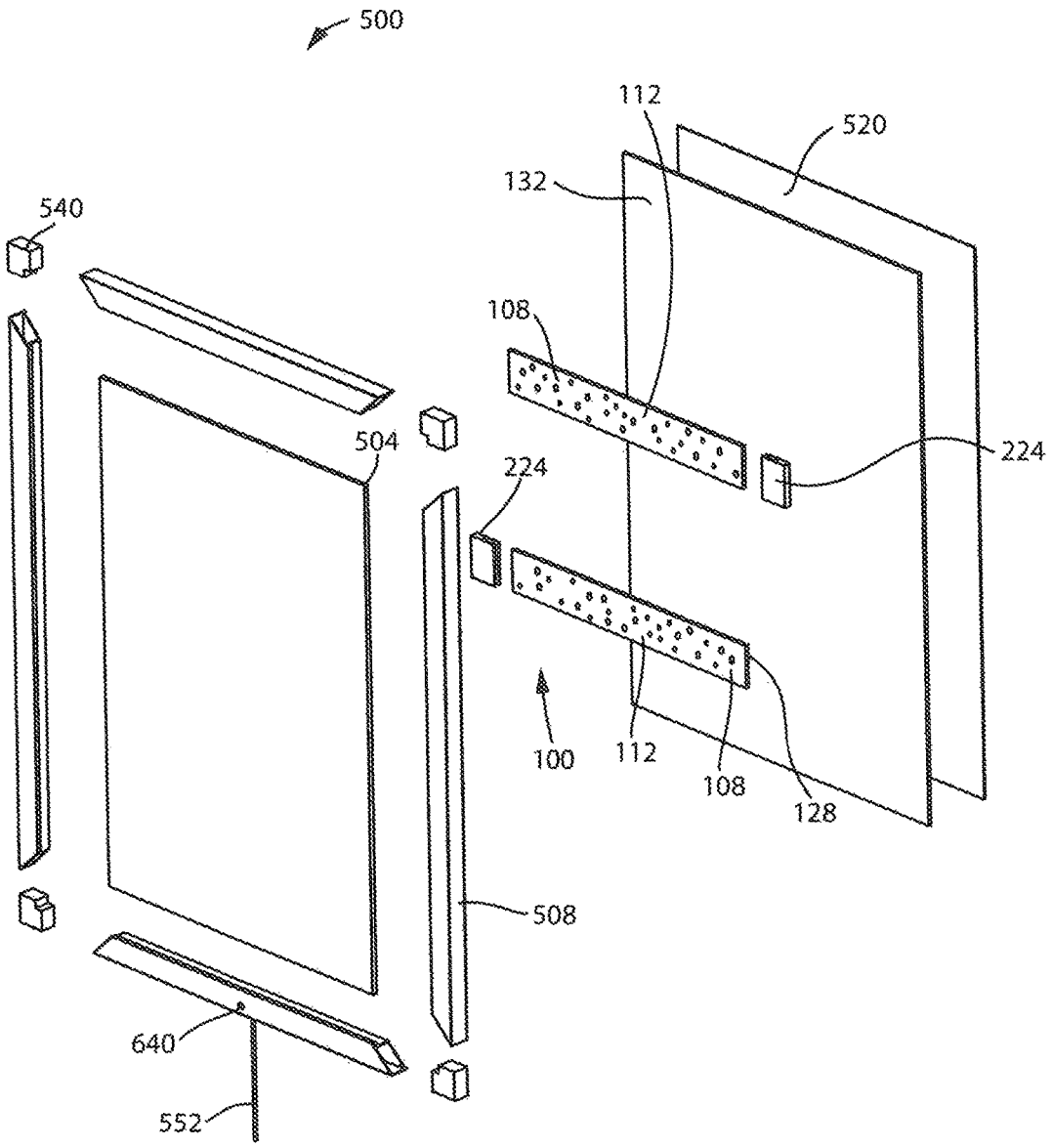


FIG. 133

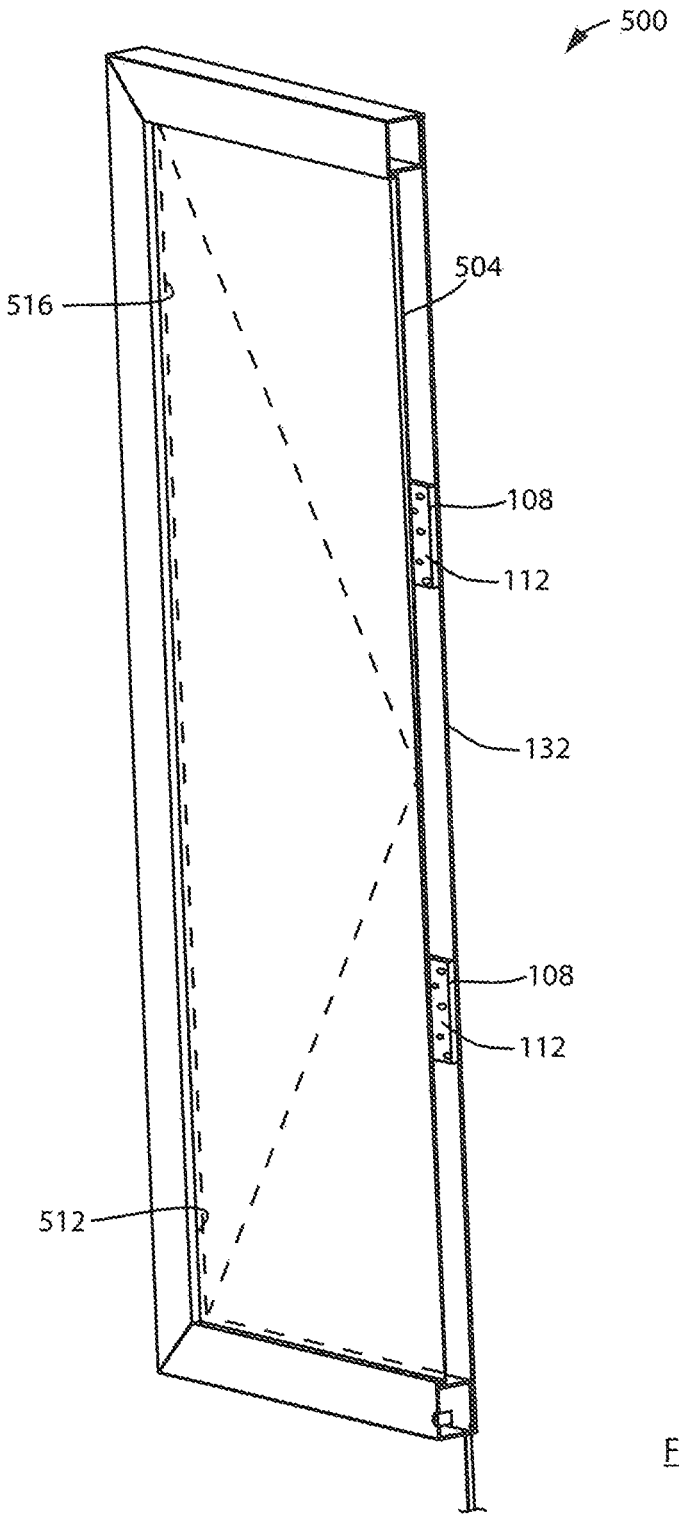


FIG. 134

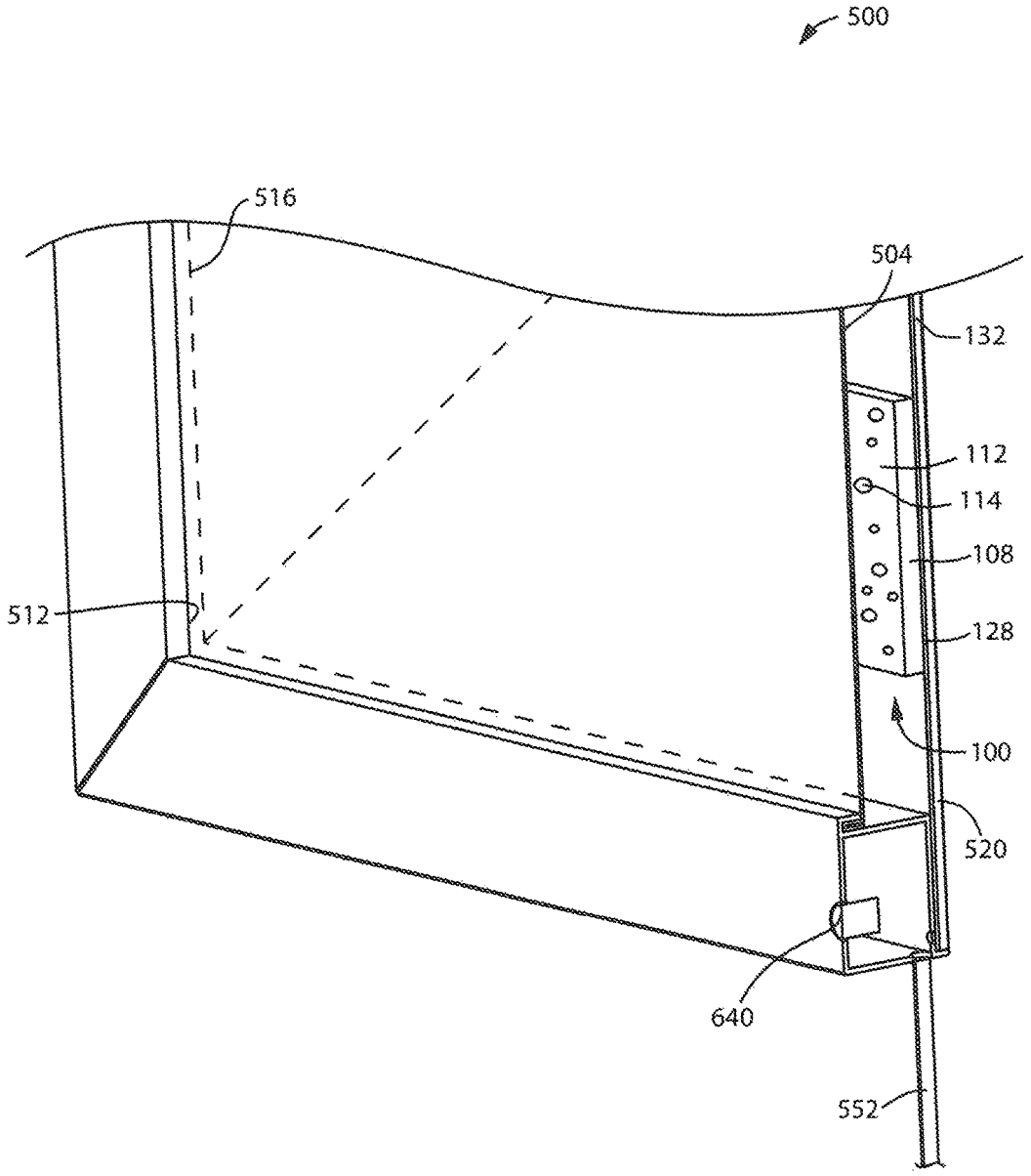


FIG. 135

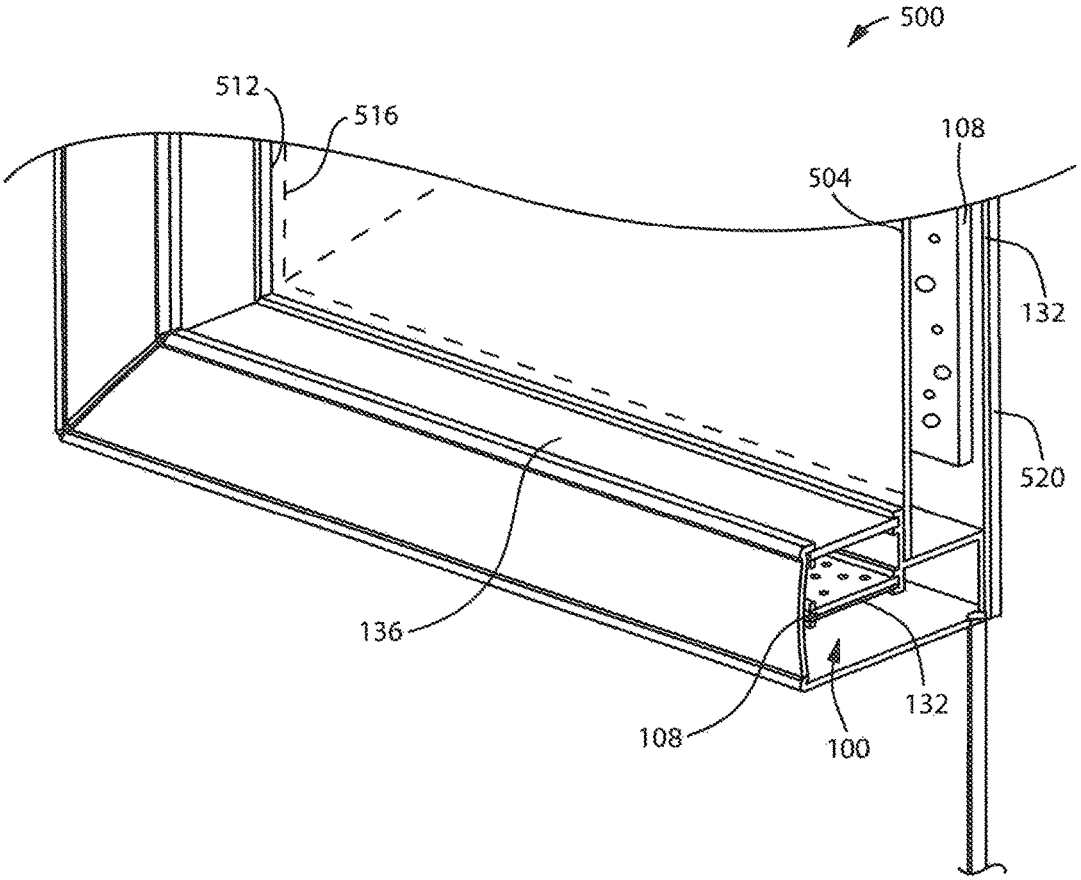


FIG. 136

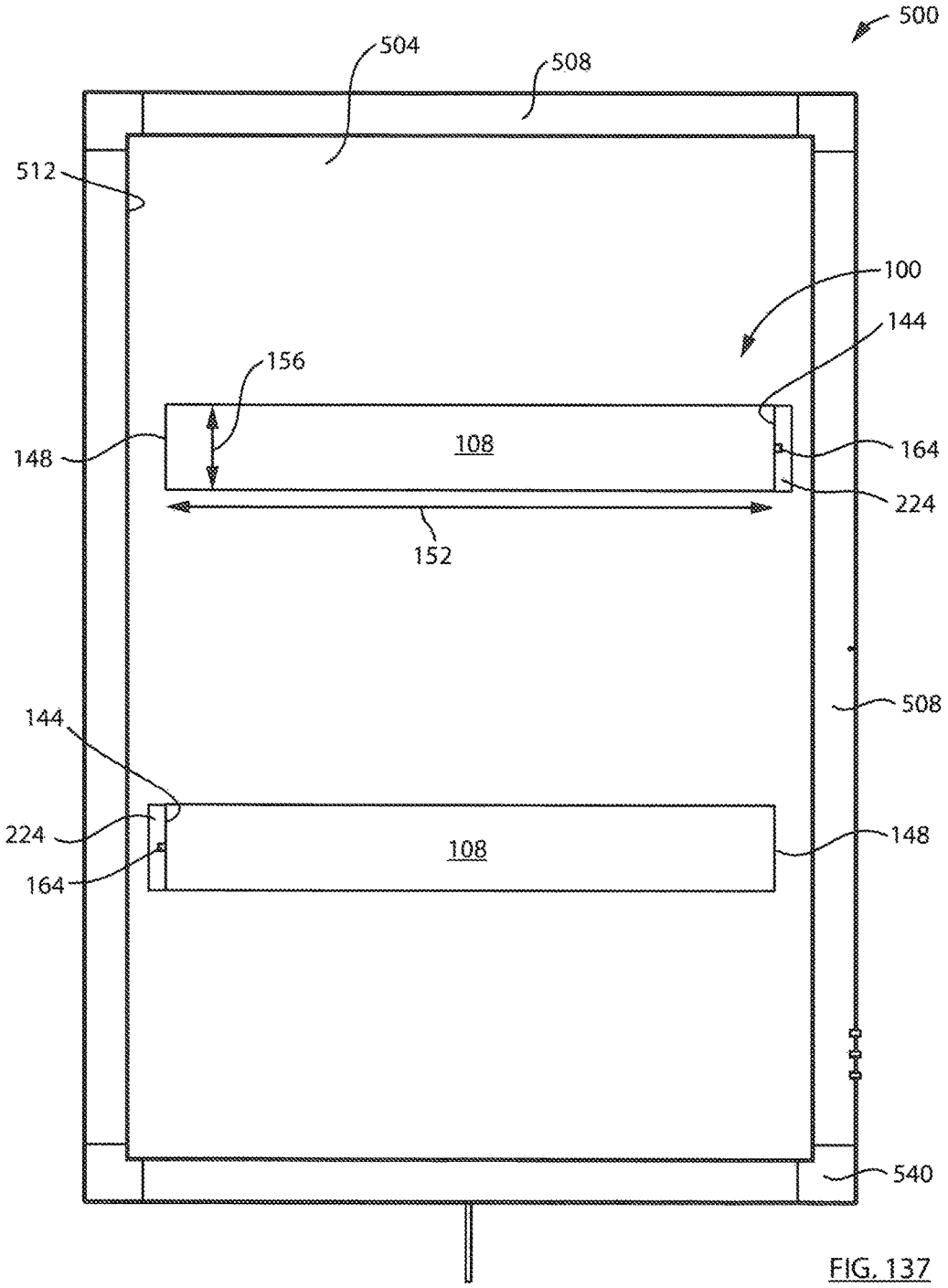
500
504
508
512
100
144
156
108
148
164
224
152
508
144
224
108
148
164
540

FIG. 137

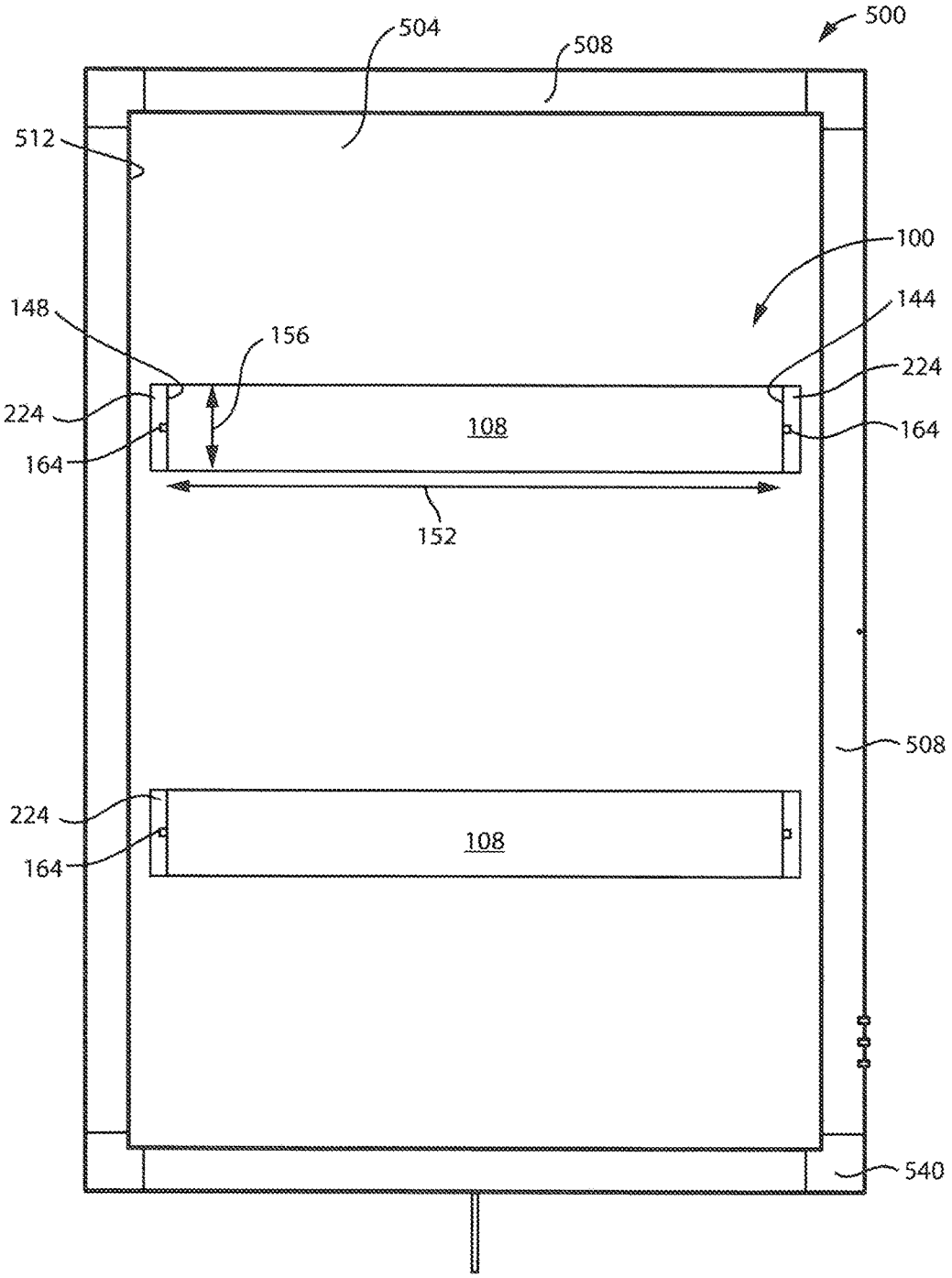
500
504
508
512
100
148
144
156
224
224
108
164
164
152
508
224
108
164
540

FIG. 138

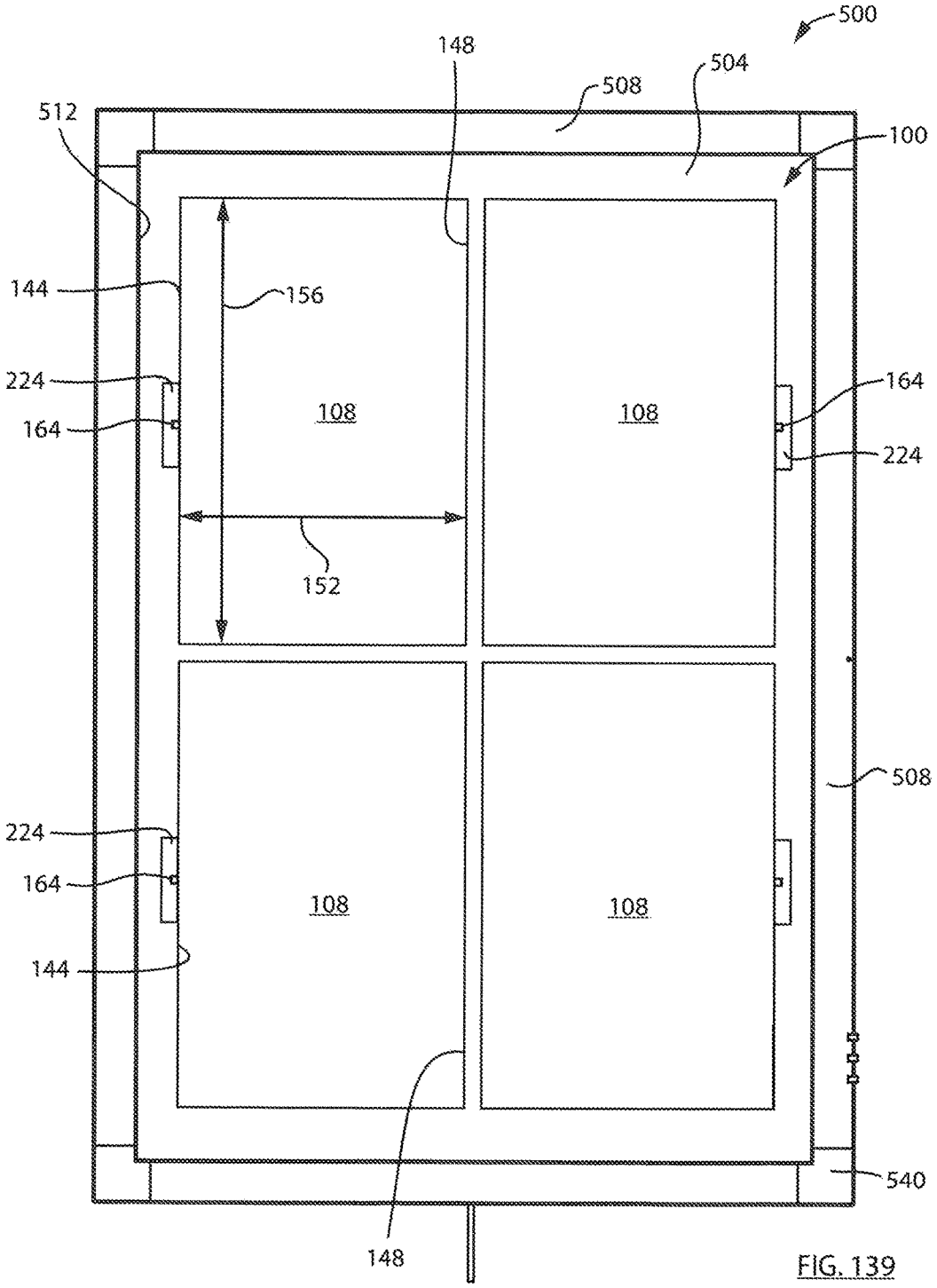
500
148
504
508
512
100
144
156
224
164
108
108
164
224
152
508
224
164
108
108
144
540
148

FIG. 139

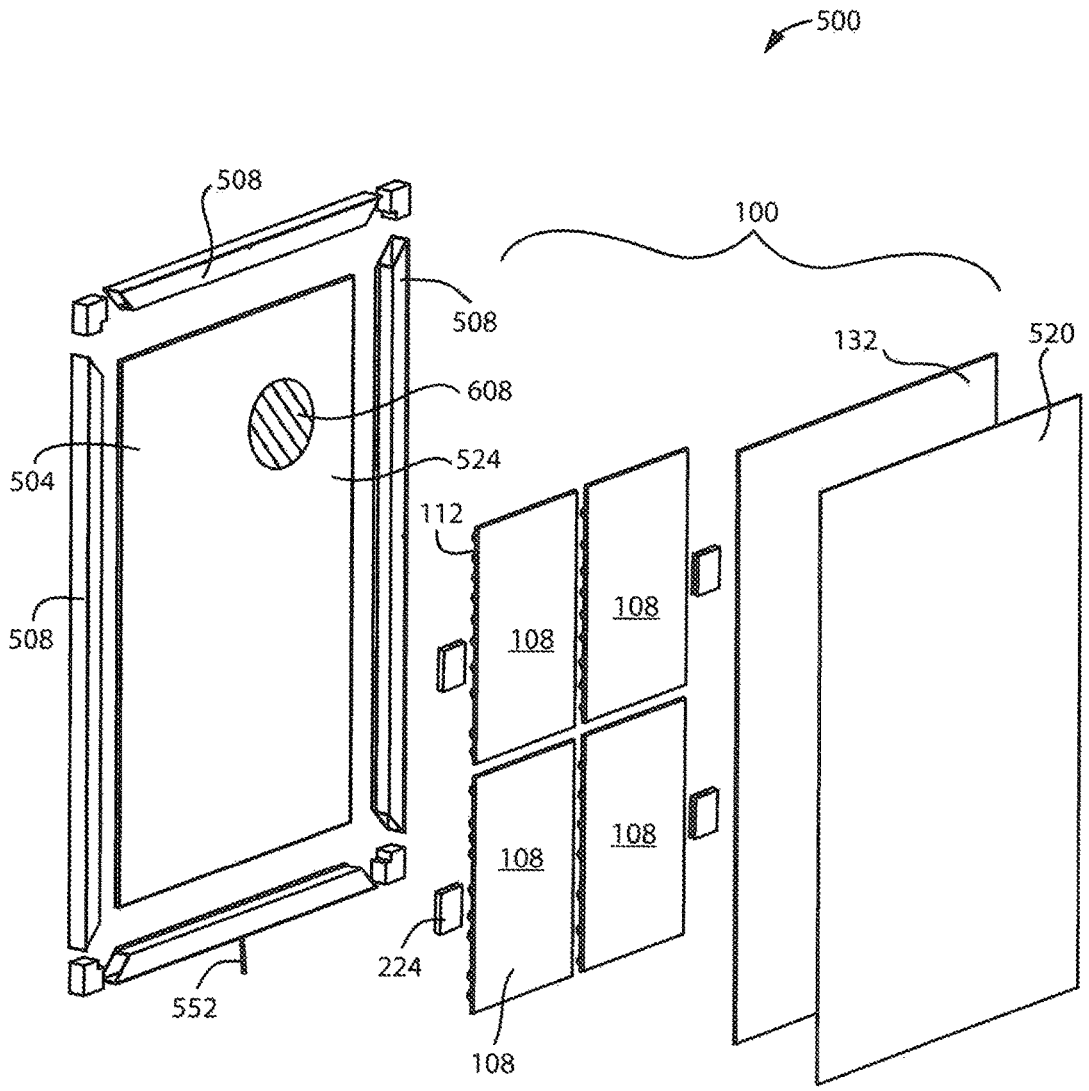
500
508
100
508
132
520
608
504
524
112
508
108
108
108
108
224
552
108

FIG. 140

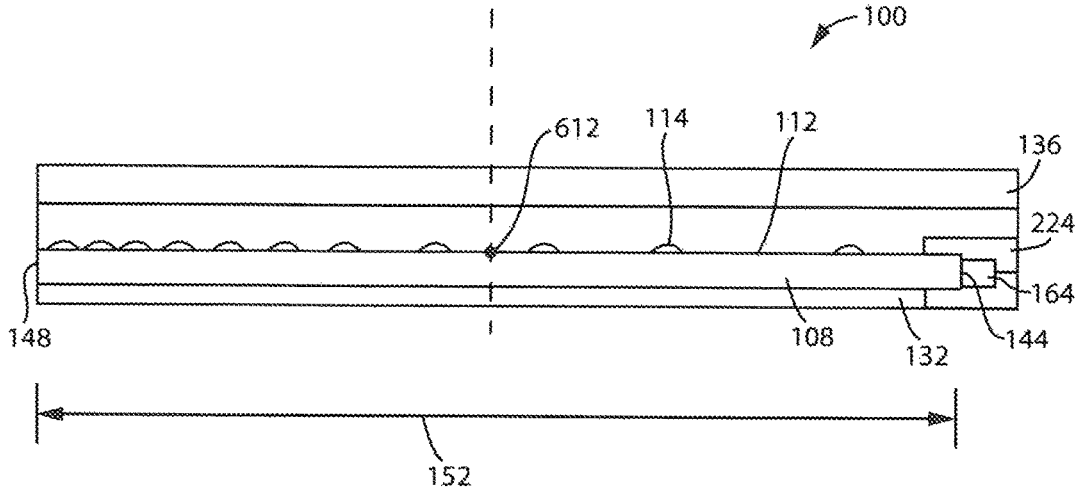


FIG. 141

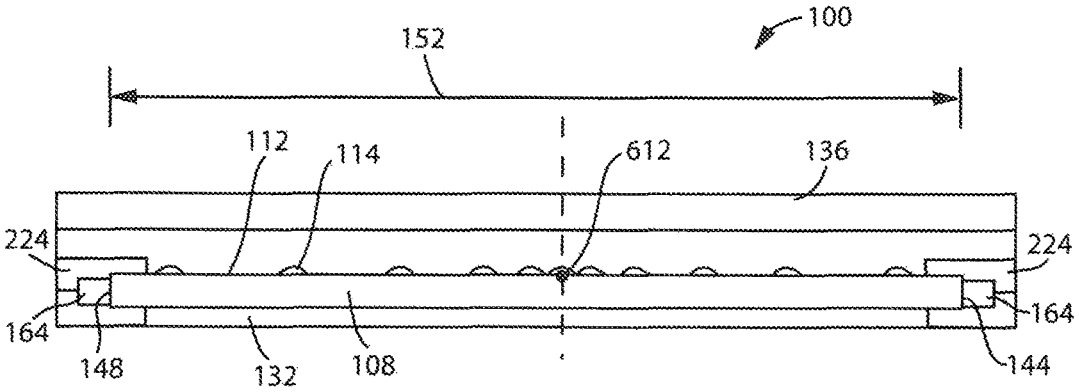


FIG. 142

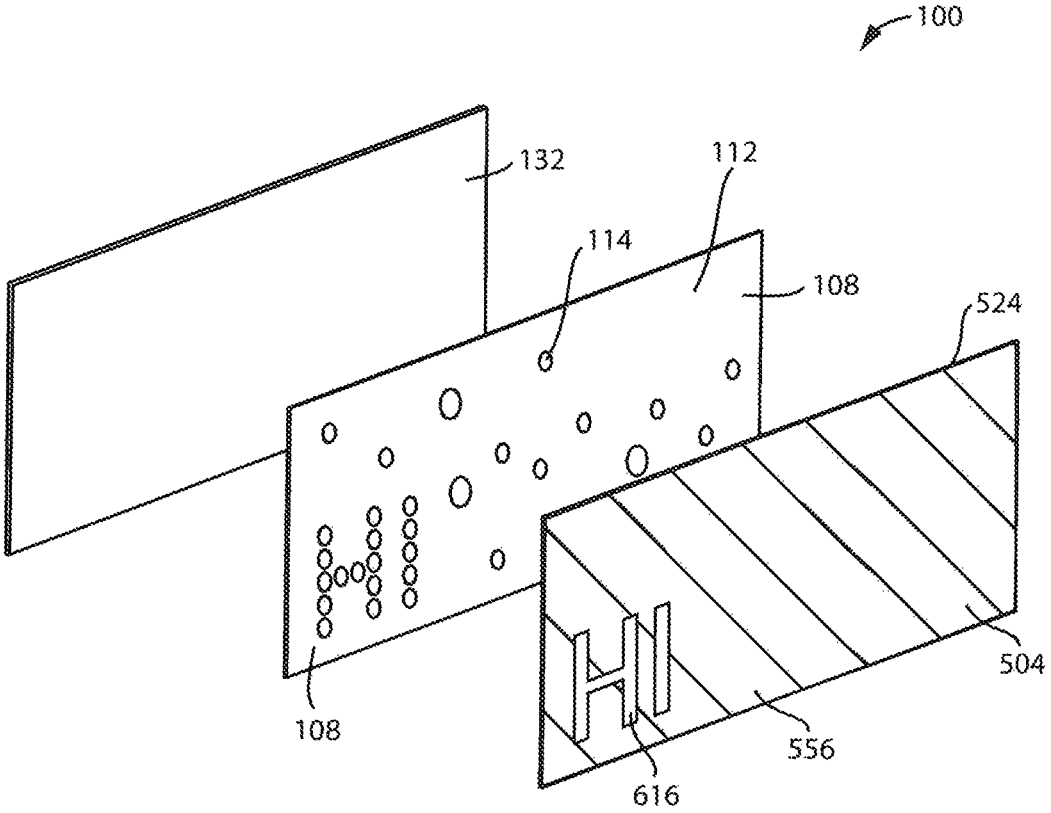


FIG. 143

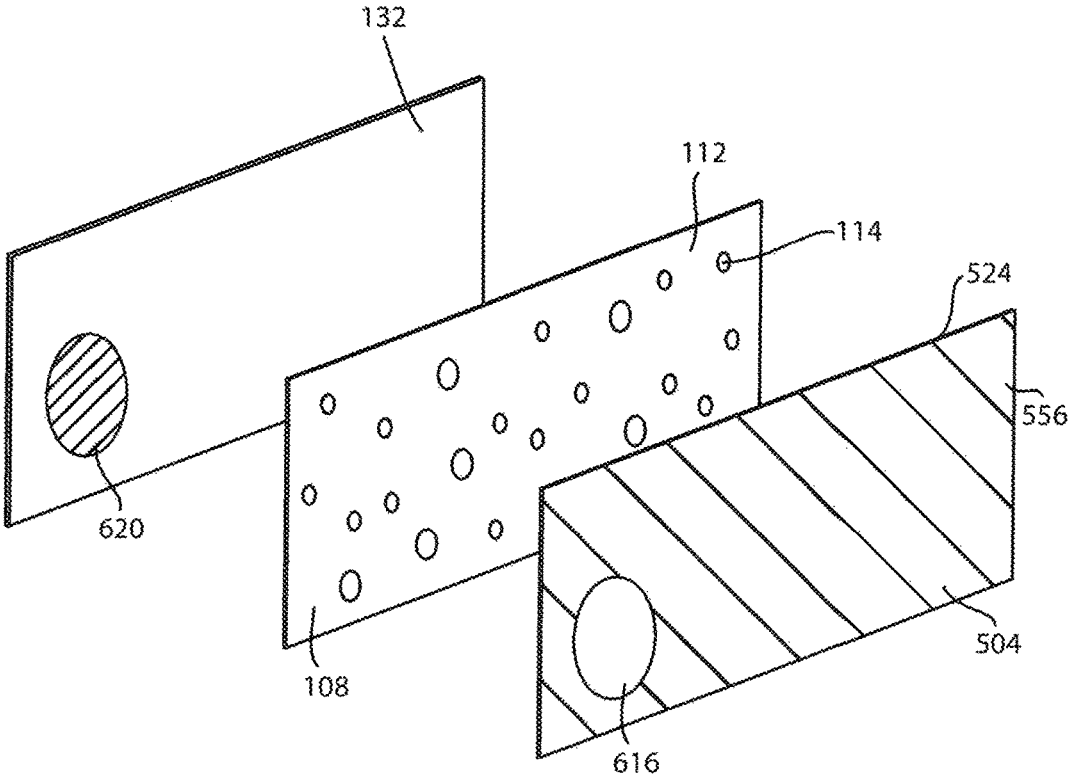


FIG. 144

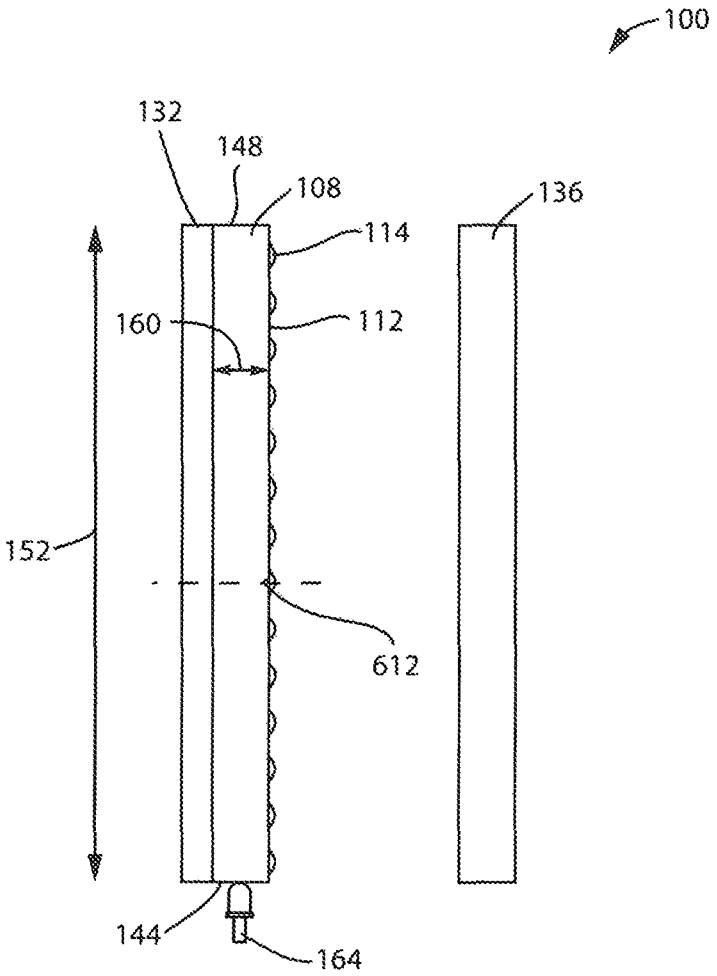


FIG. 145

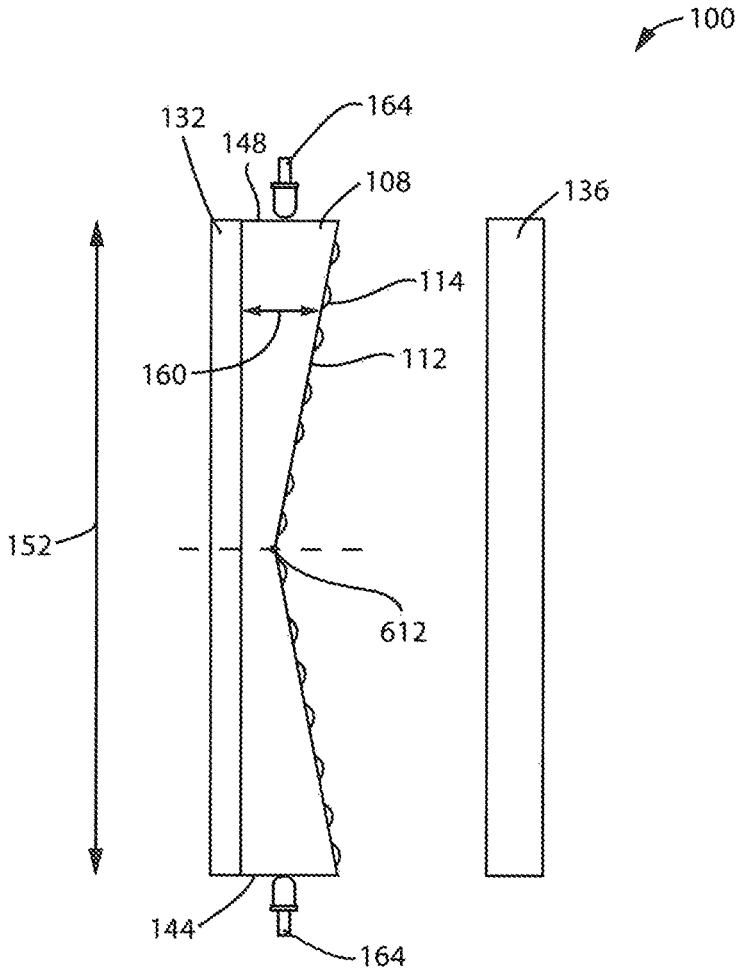


FIG. 146

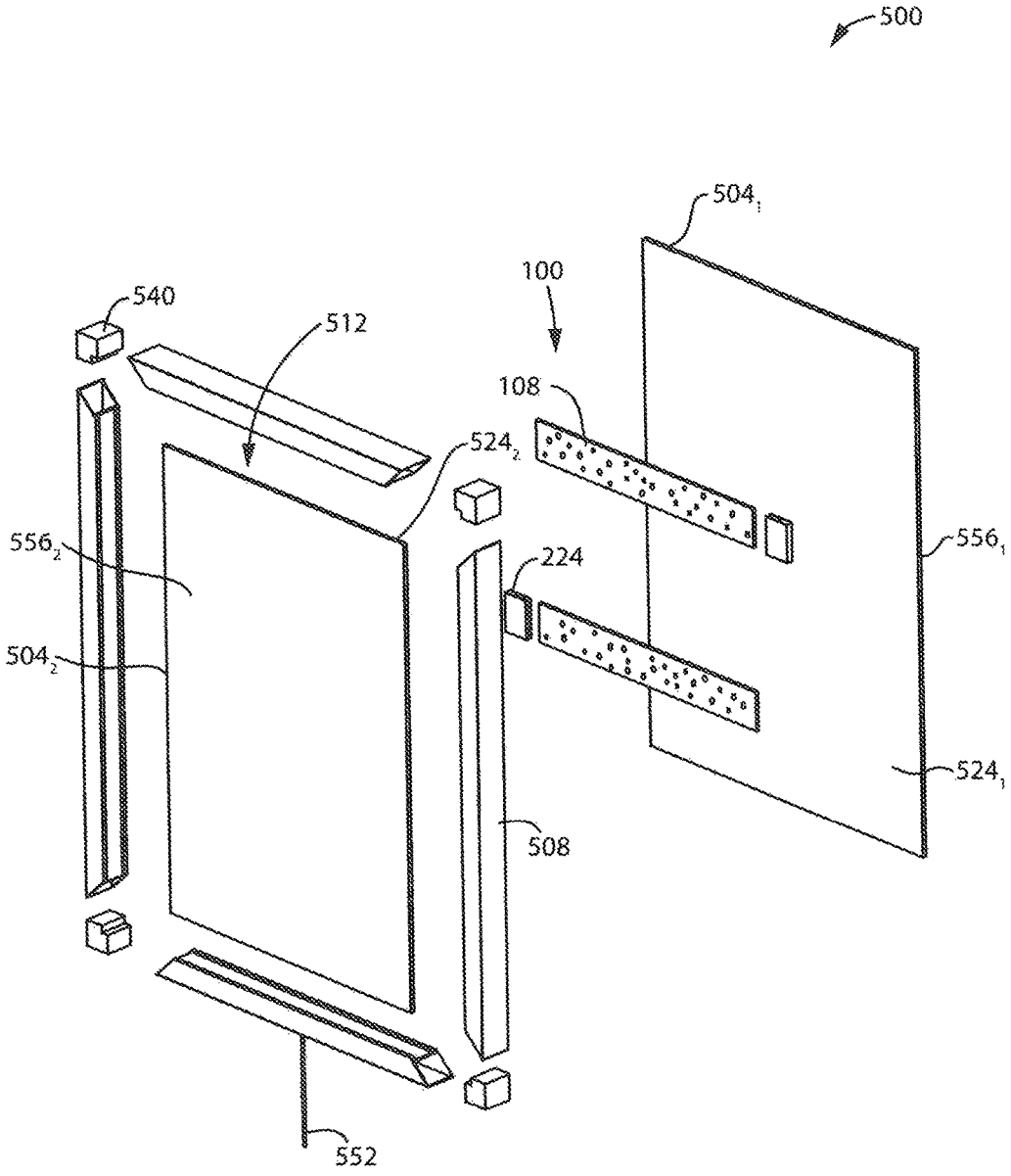


FIG. 147

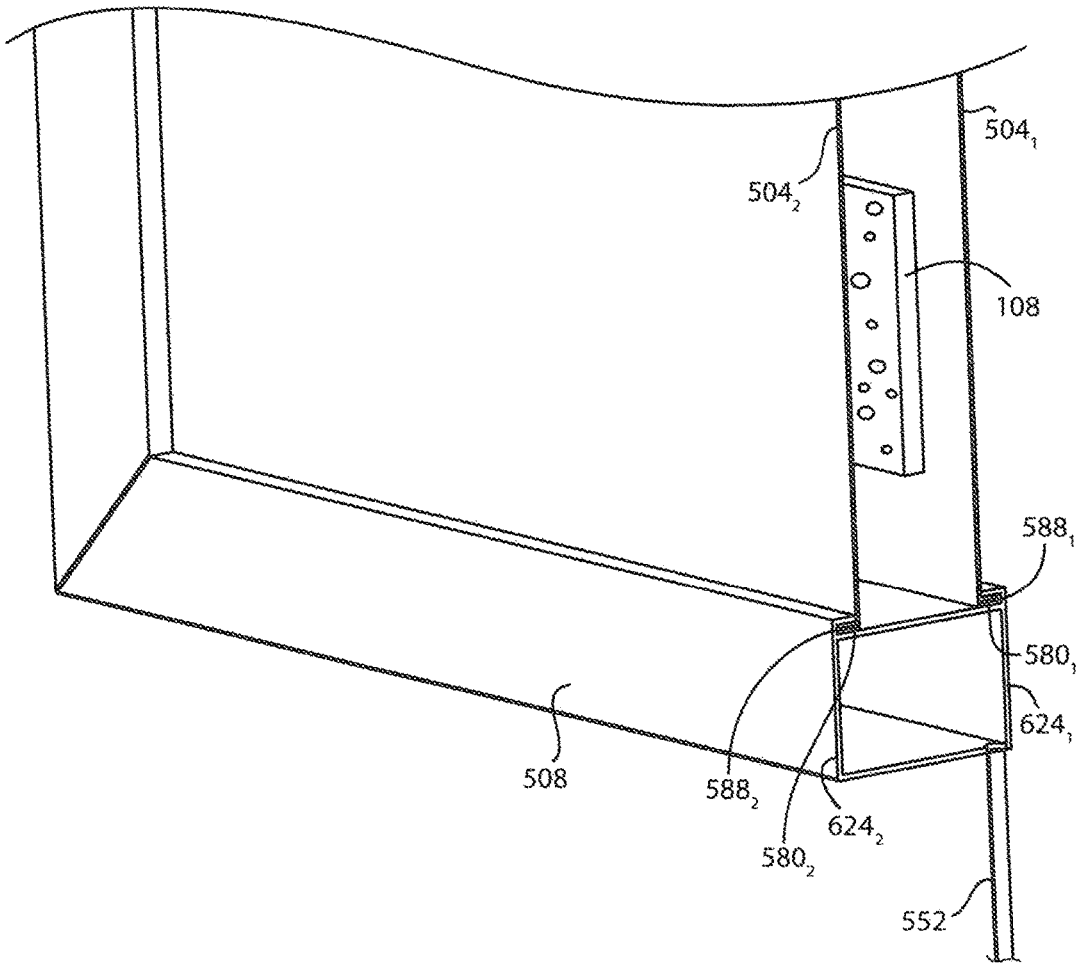


FIG. 148

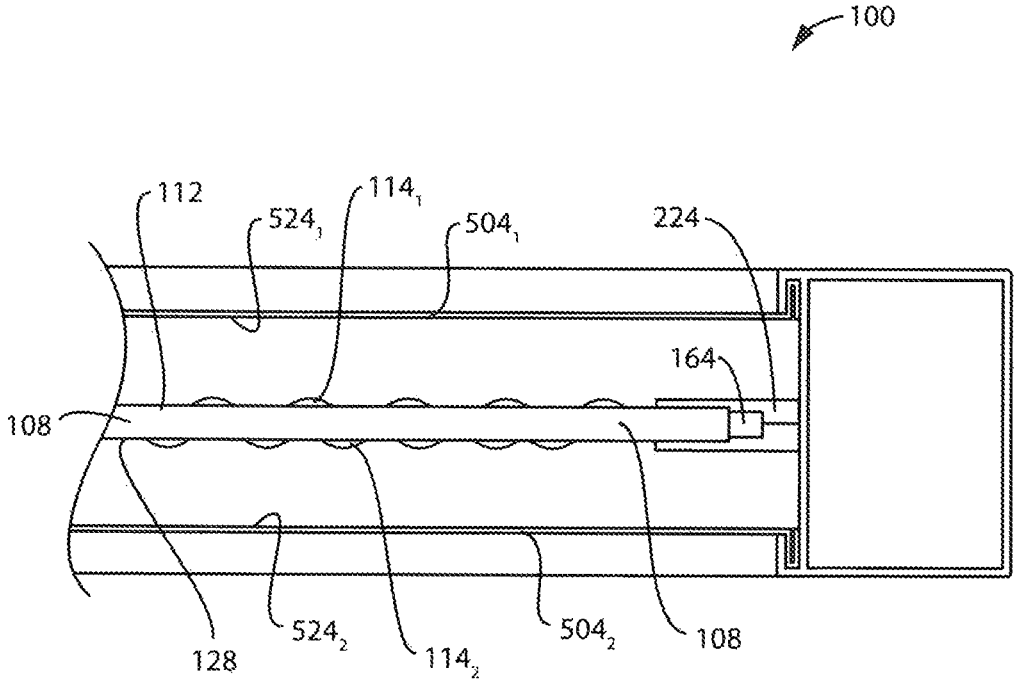


FIG. 149

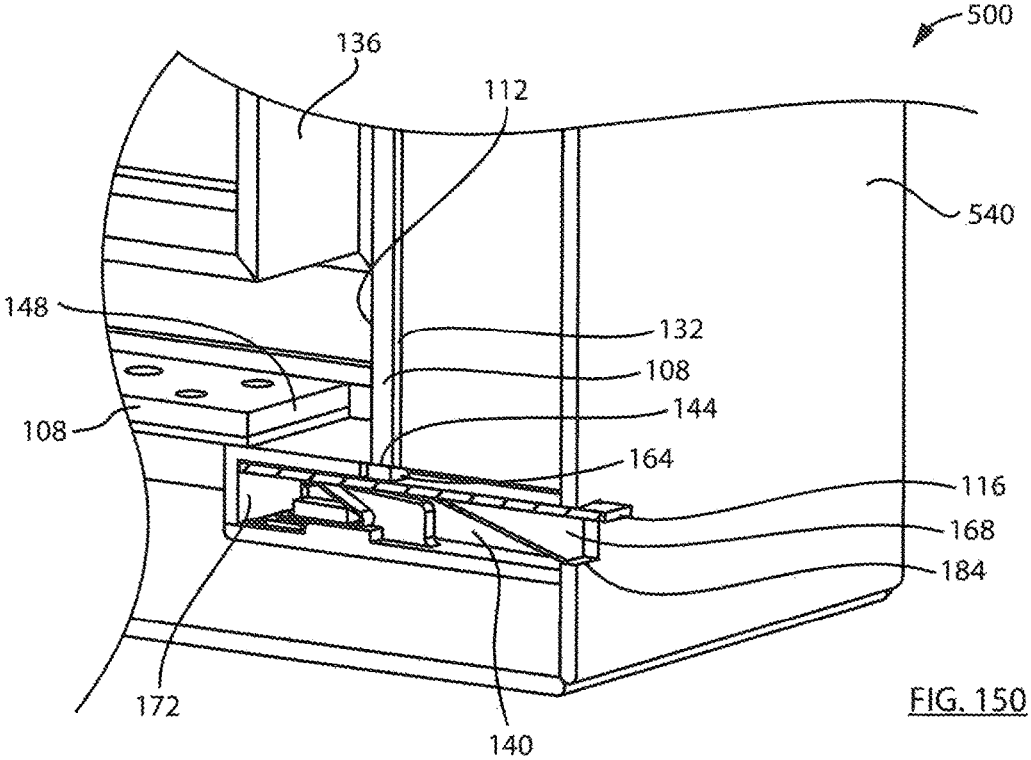


FIG. 150

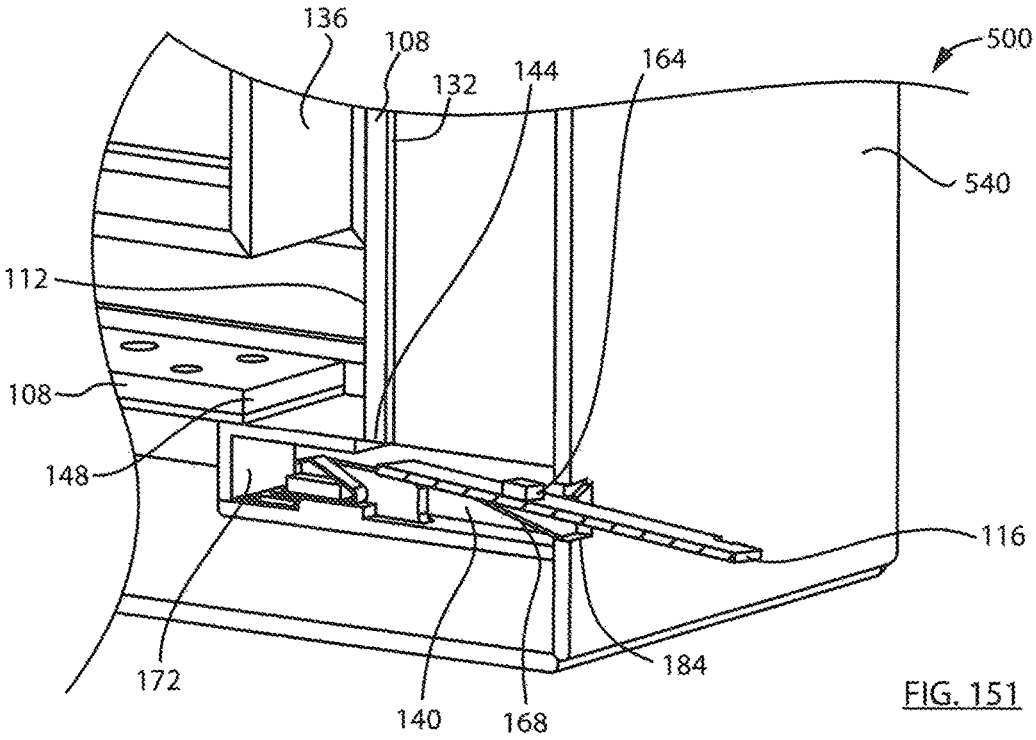


FIG. 151

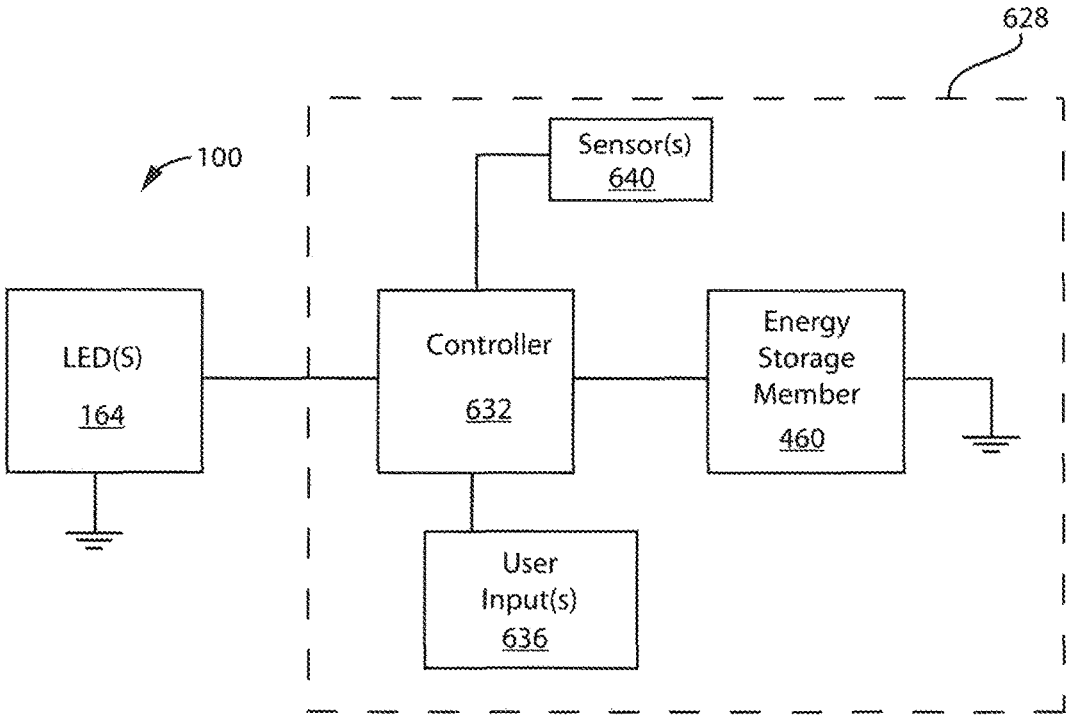
628
100
Sensor(s)
640
LED(S)
164
Controller
632
Energy
Storage
Member
460
User
Input(s)
636

FIG. 152

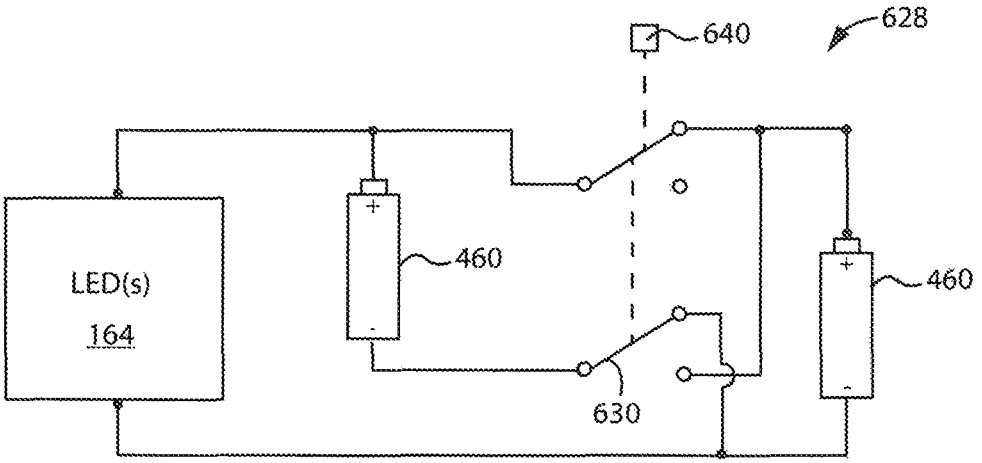


FIG. 153A

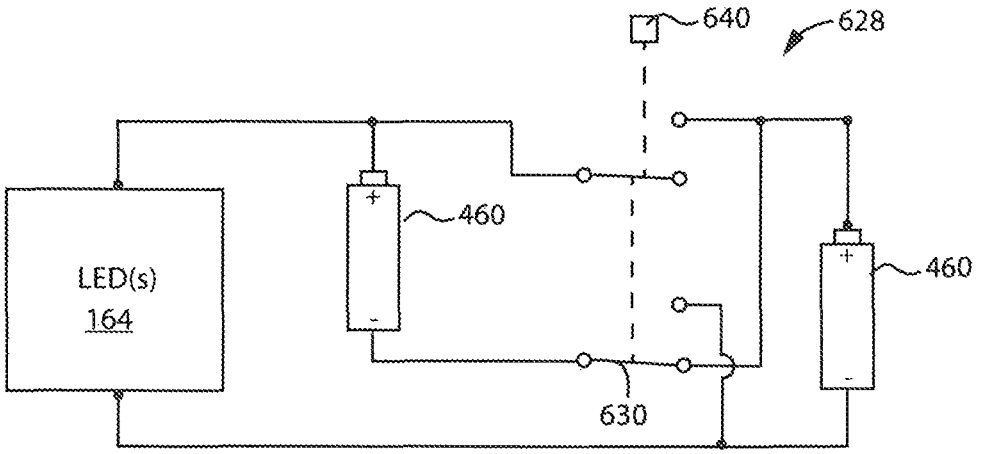


FIG. 153B

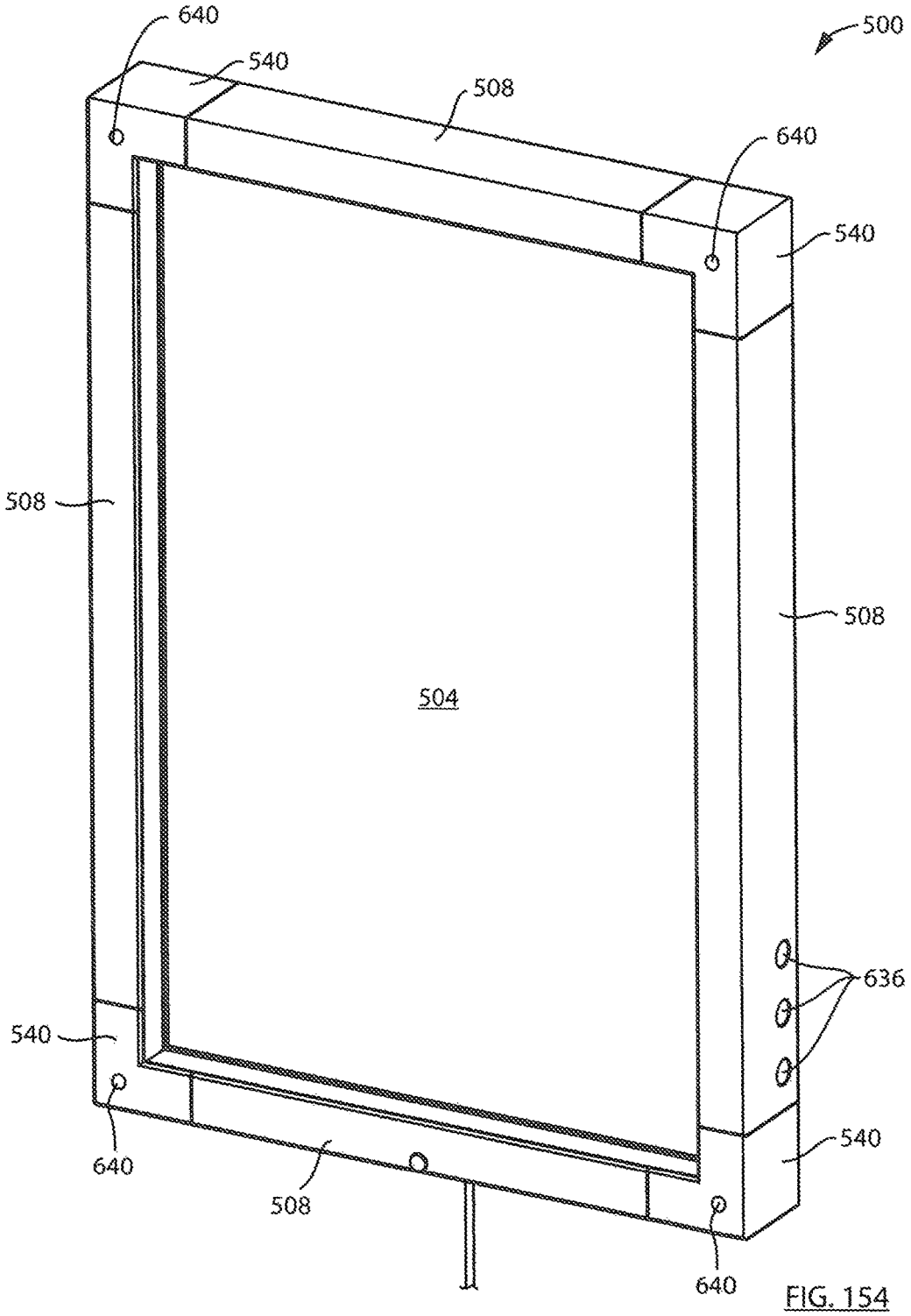


FIG. 154

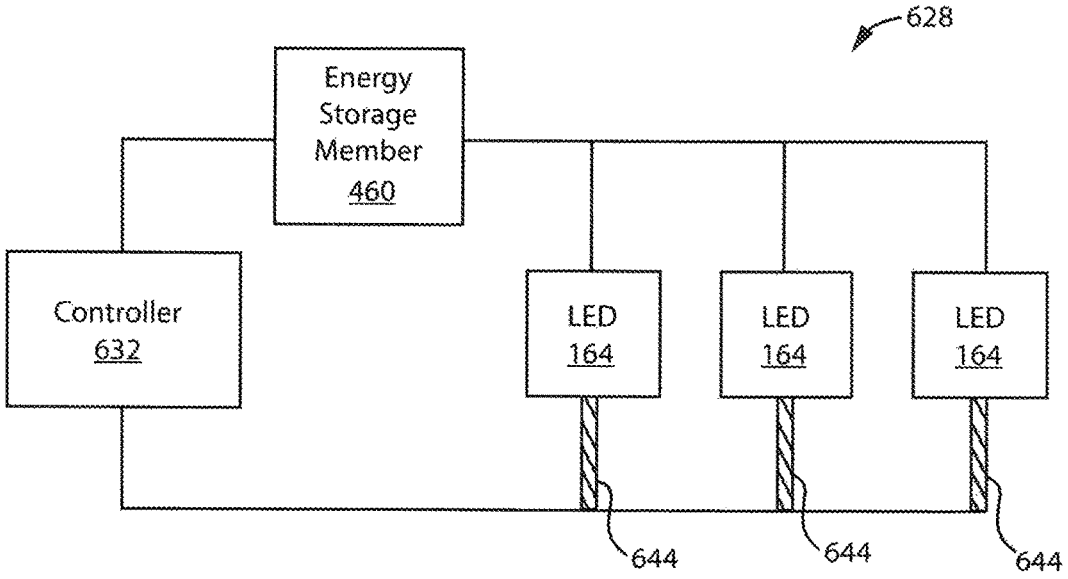
628
Energy Storage Member 460
Controller 632
LED 164
LED 164
LED 164
644
644
644

FIG. 155

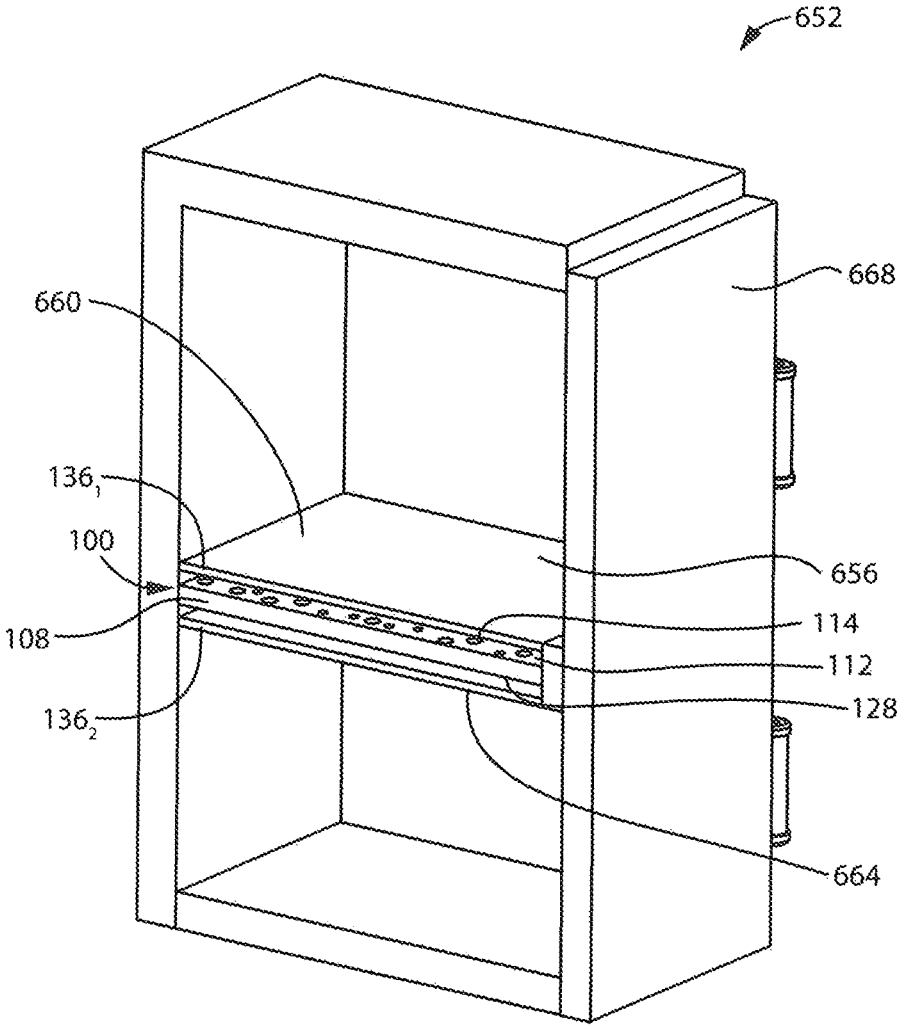


FIG. 156

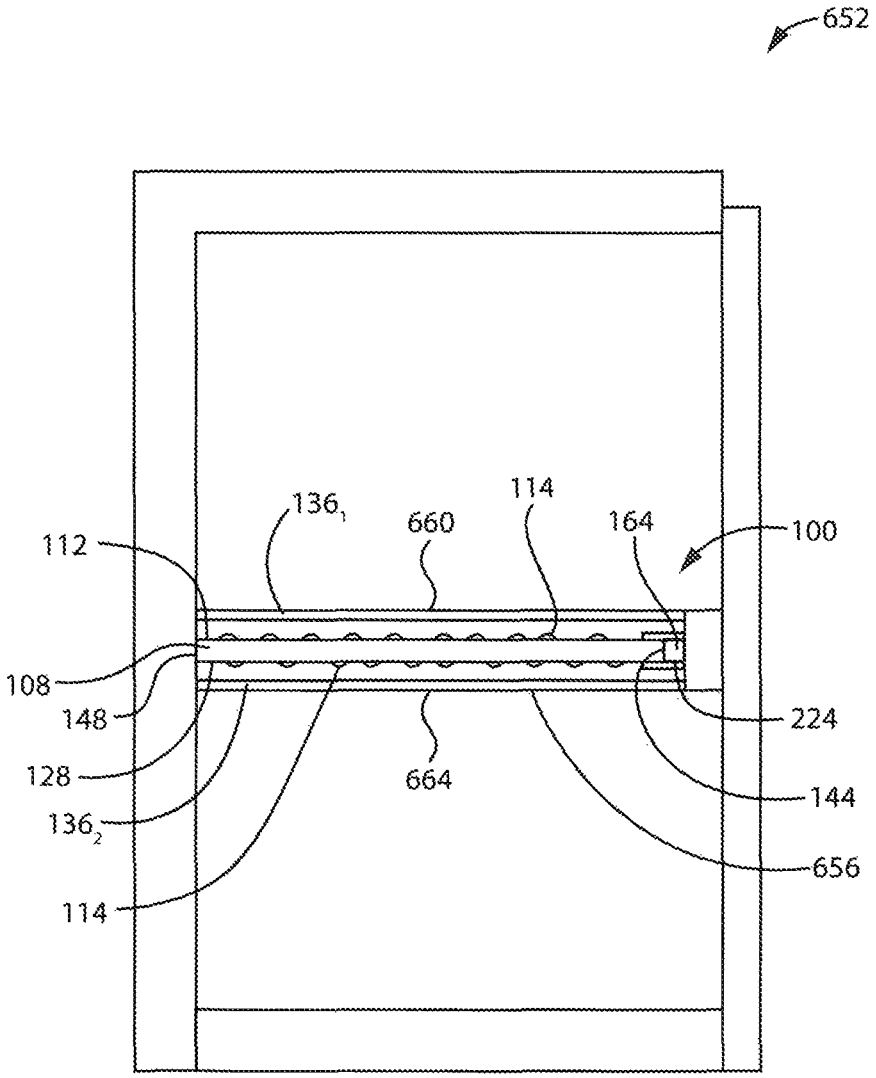
652
136$_1$
660
114
164
100
112
108
148
128
136$_2$
114
664
224
144
656

FIG. 157

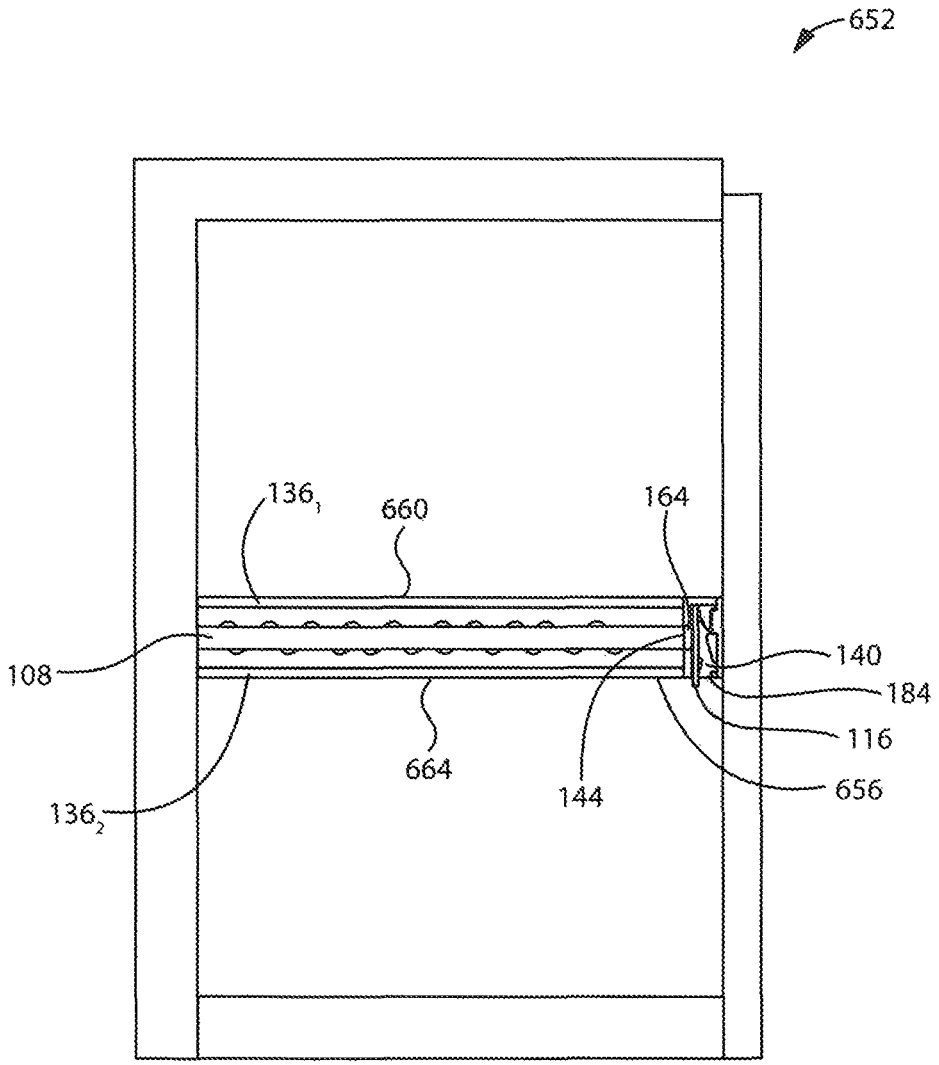


FIG. 158

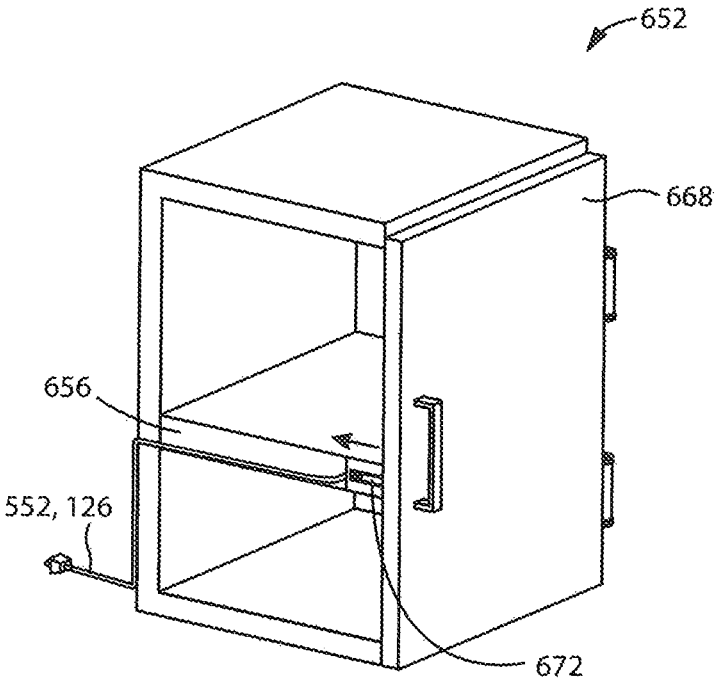


FIG. 159

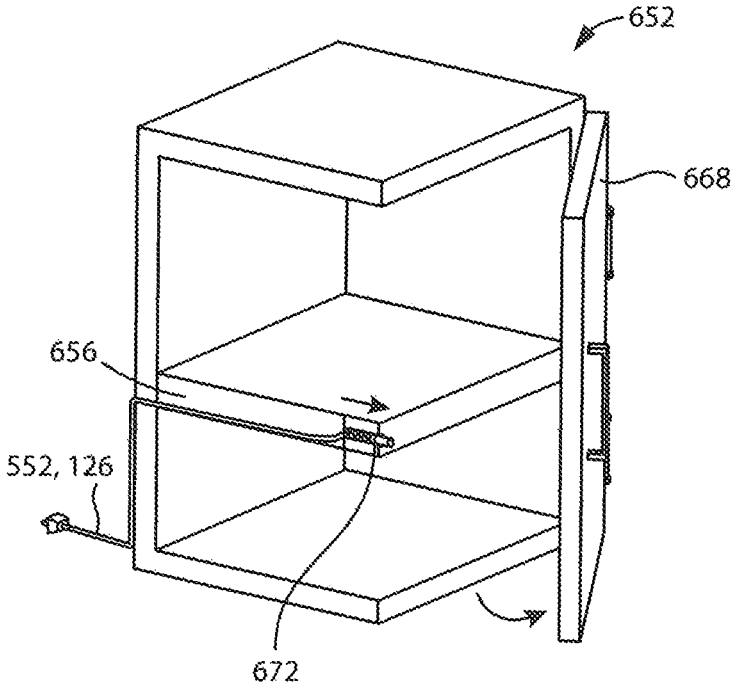


FIG. 160

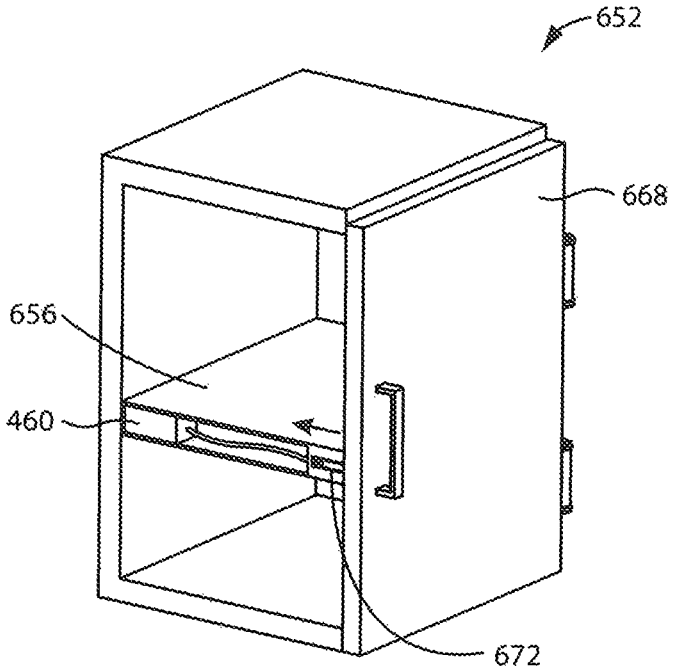


FIG. 161

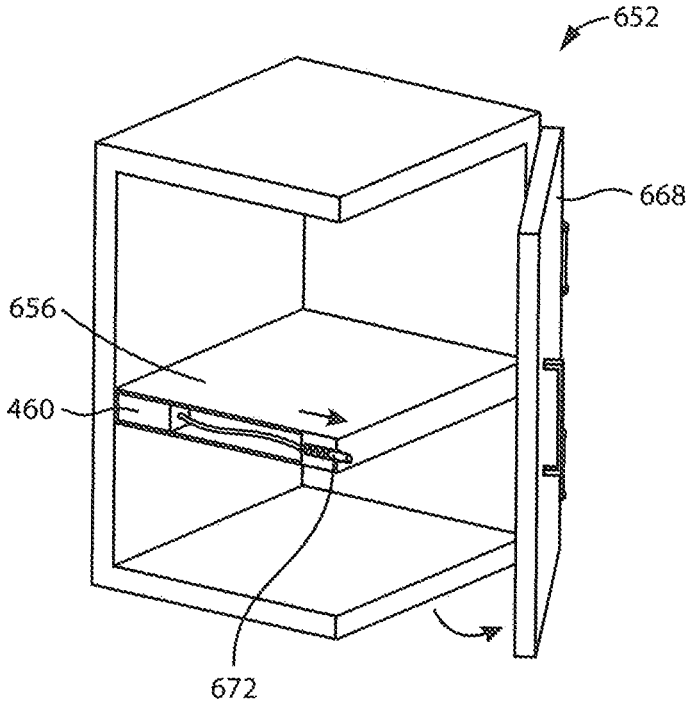


FIG. 162

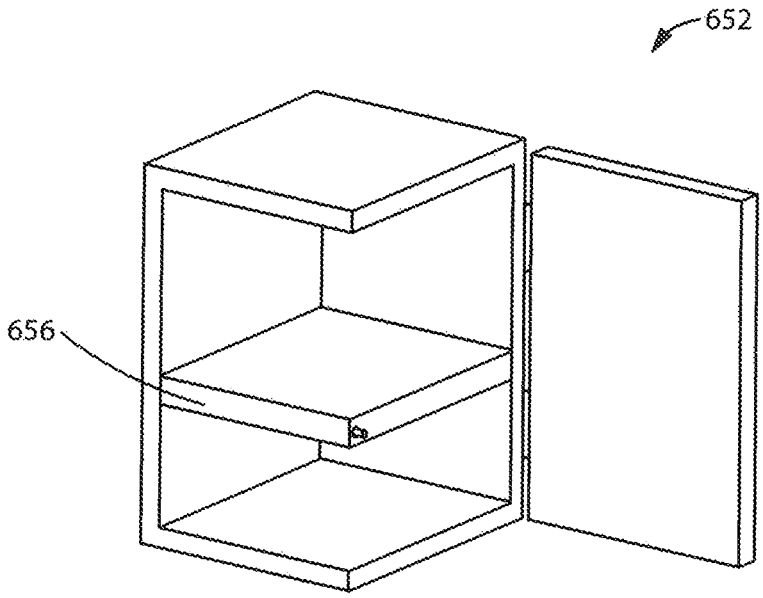


FIG. 163

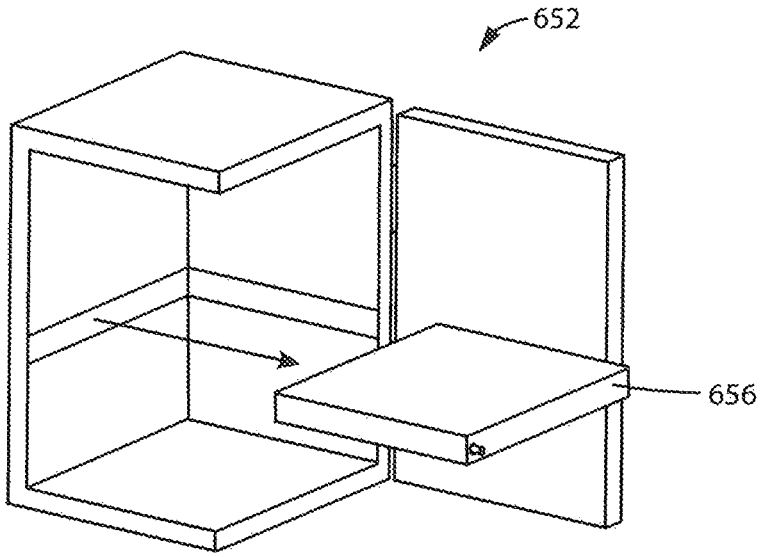


FIG. 164

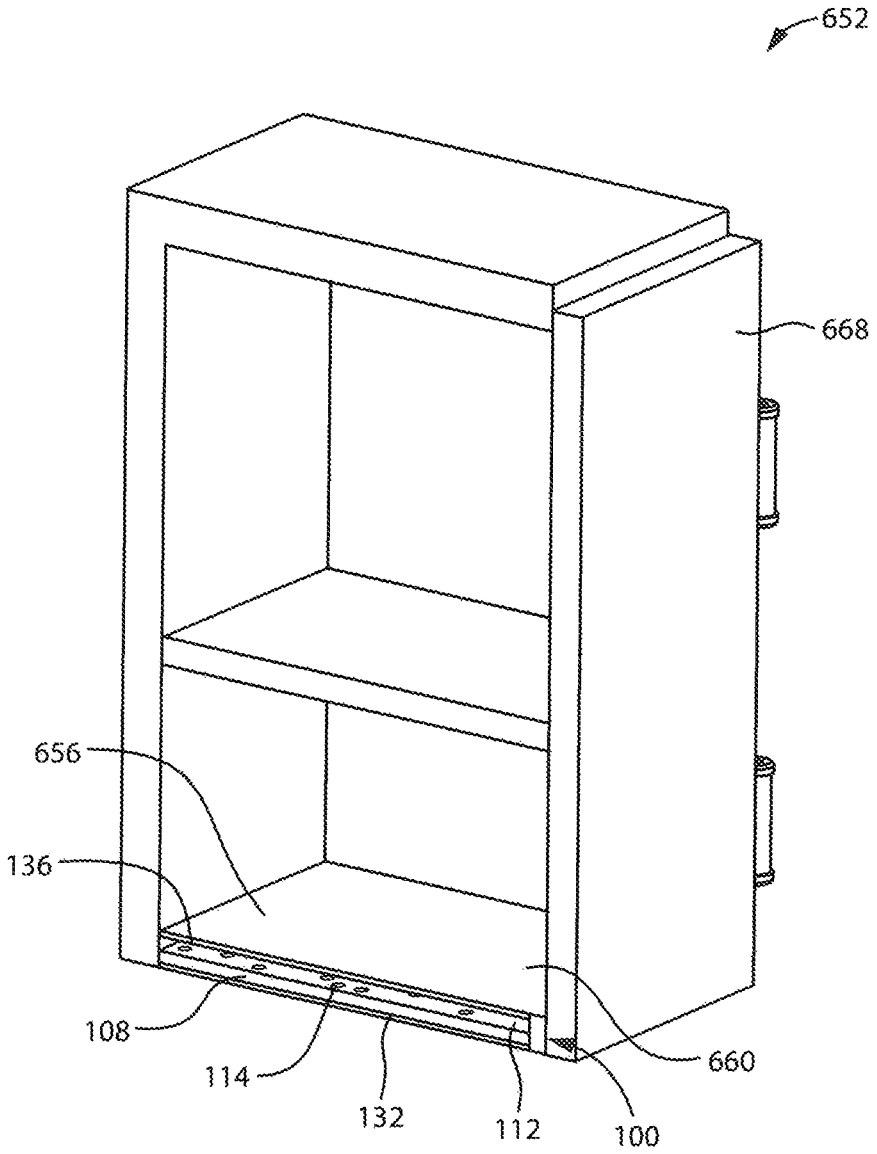


FIG. 165

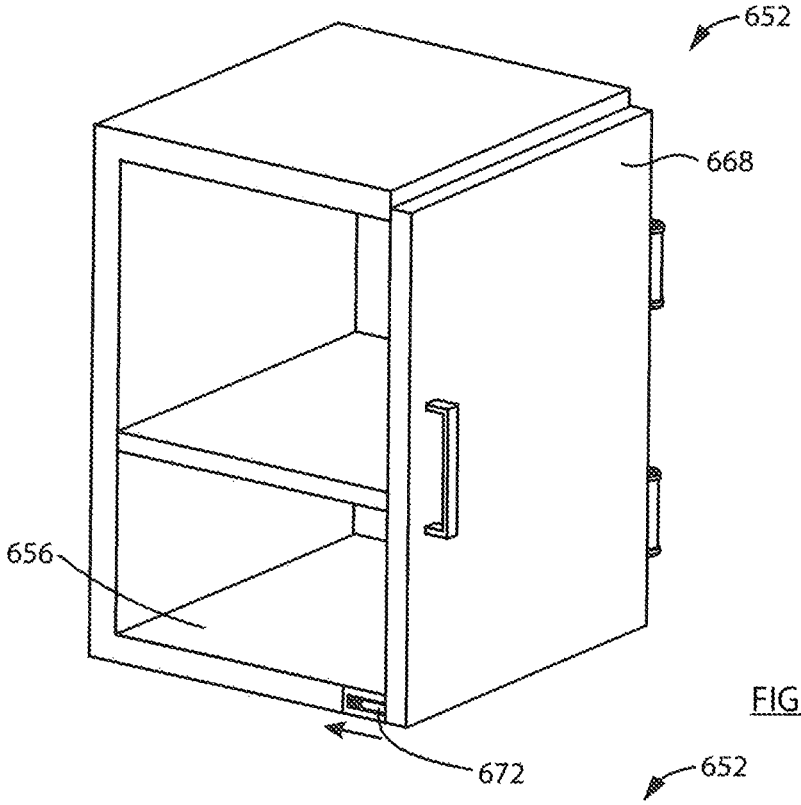


FIG. 166

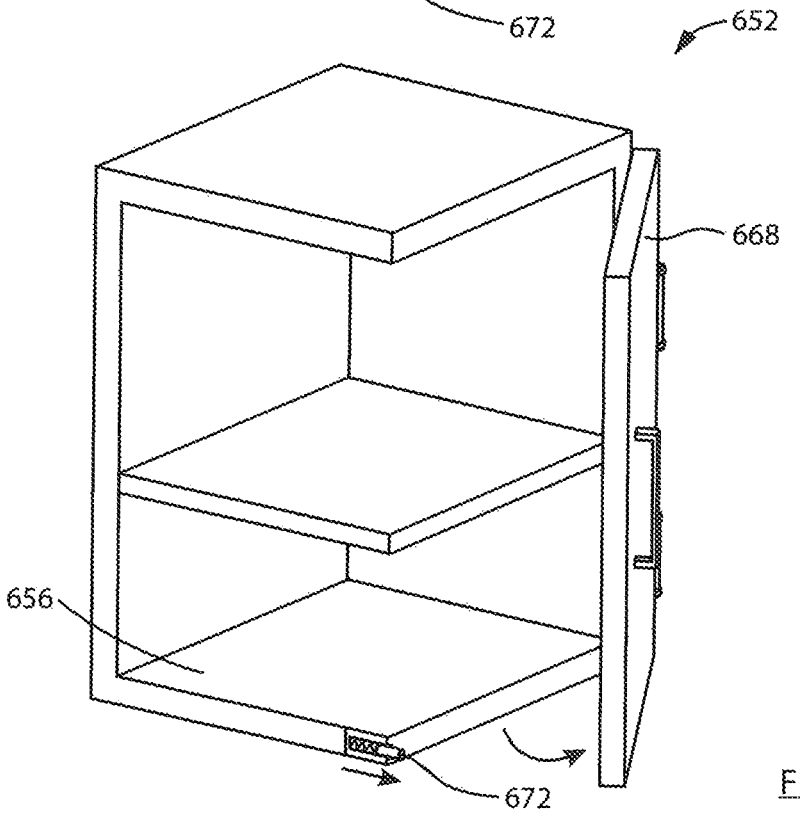


FIG. 167

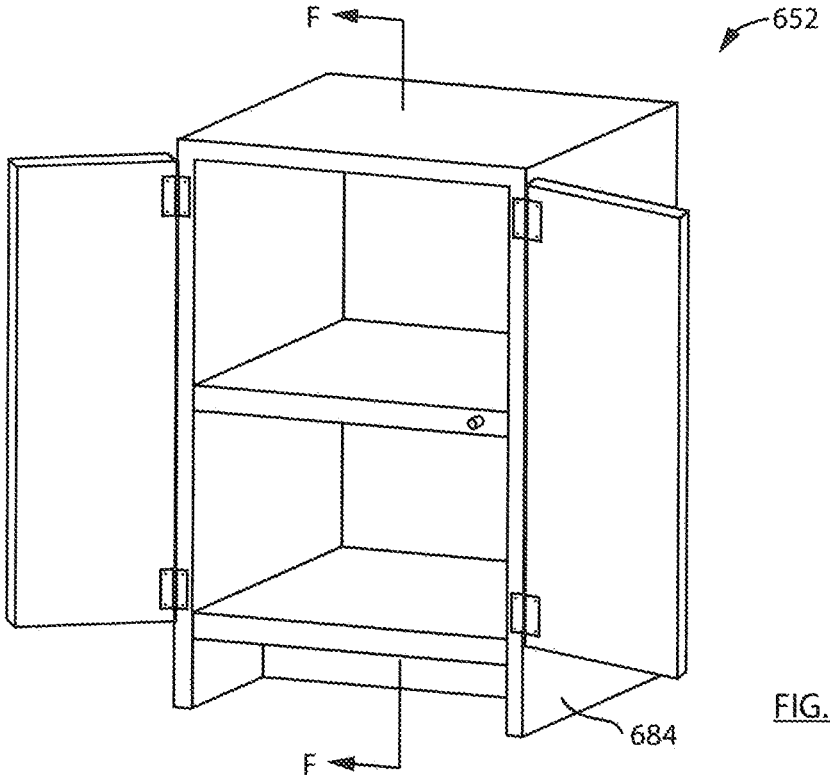


FIG. 168

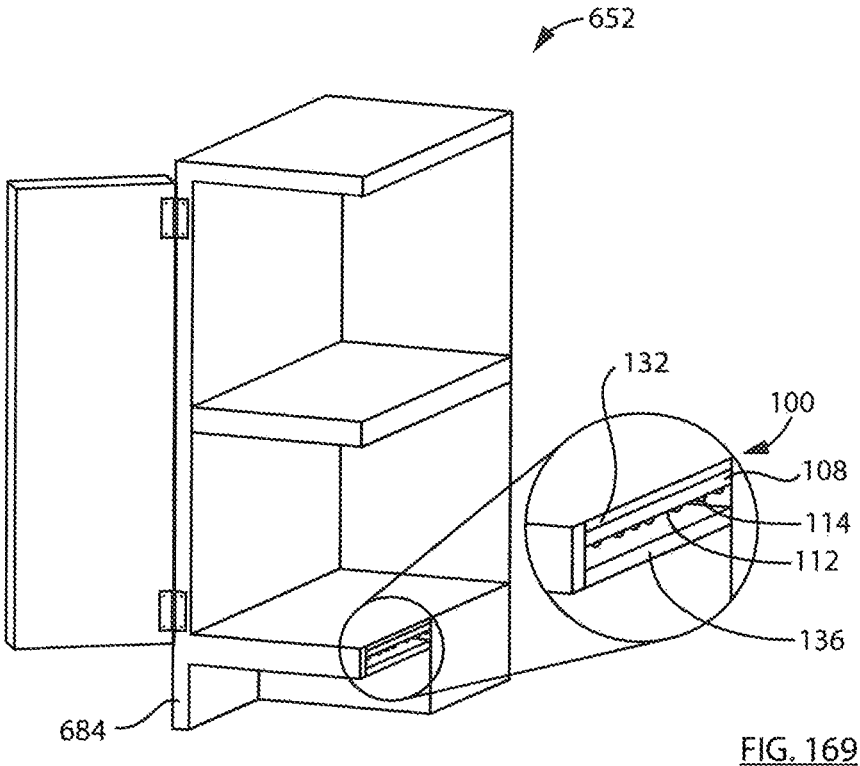


FIG. 169

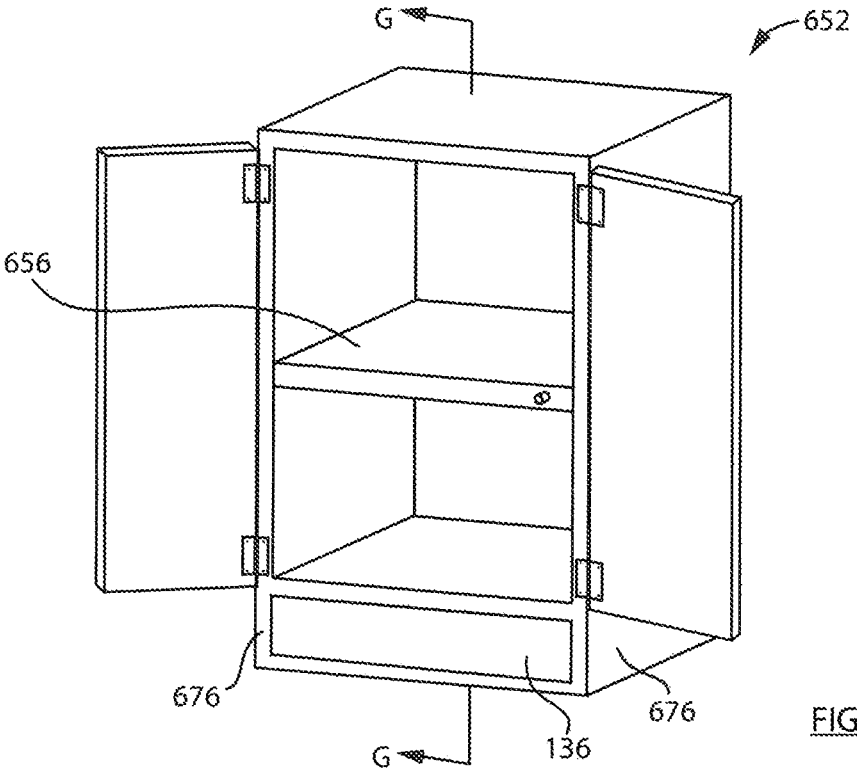


FIG. 170

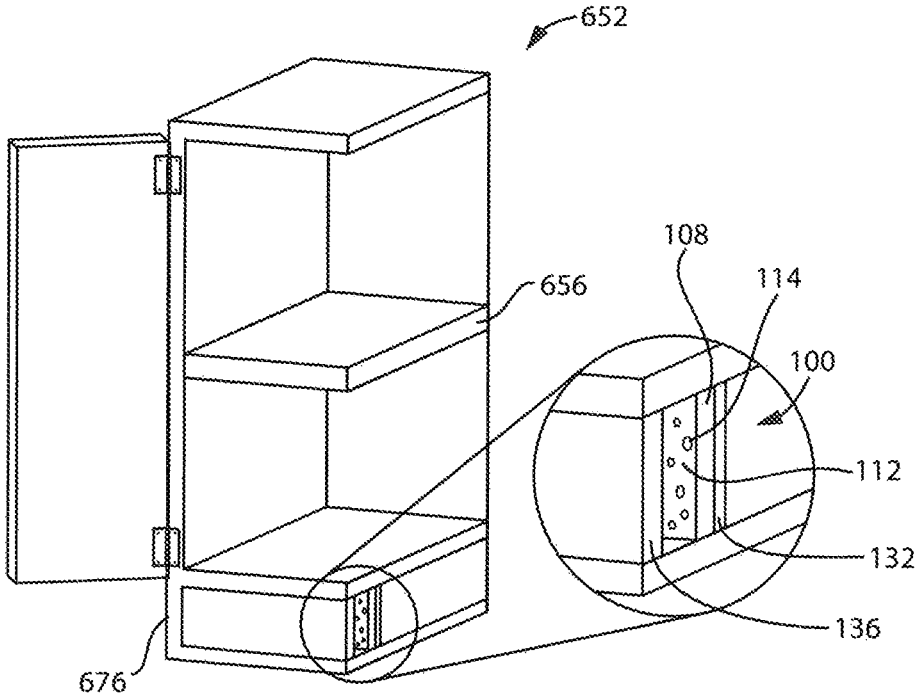


FIG. 171

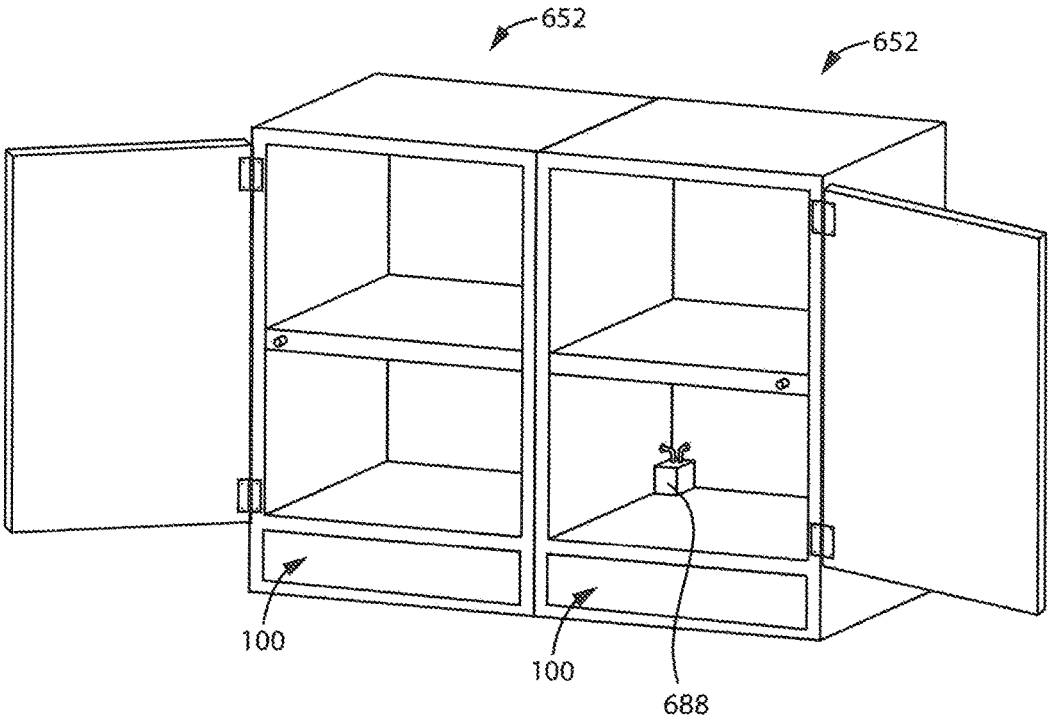


FIG. 172

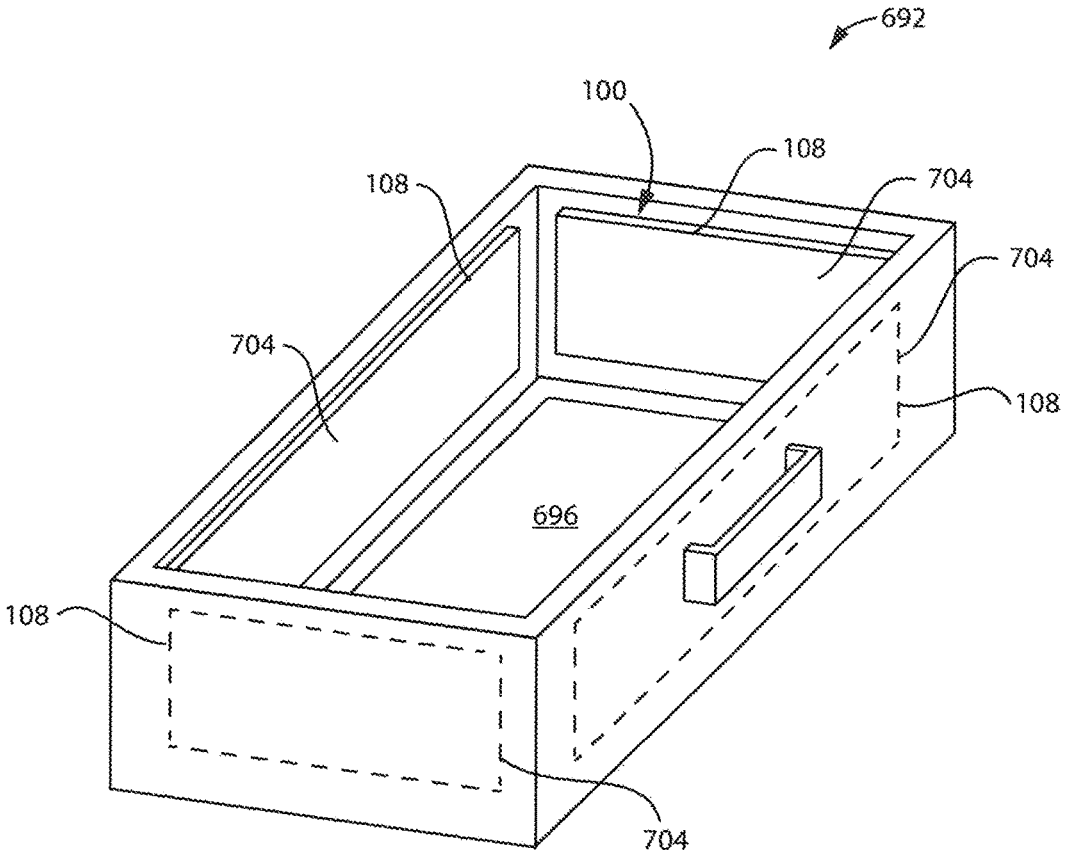


FIG. 173

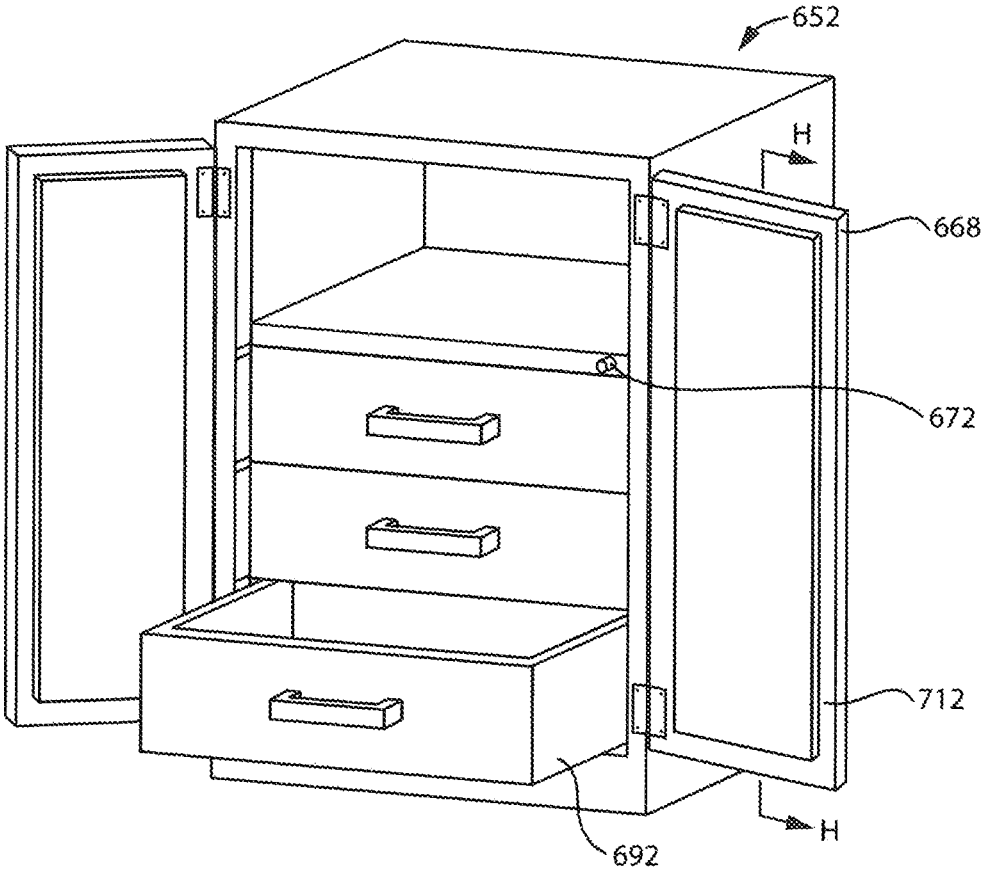


FIG. 174

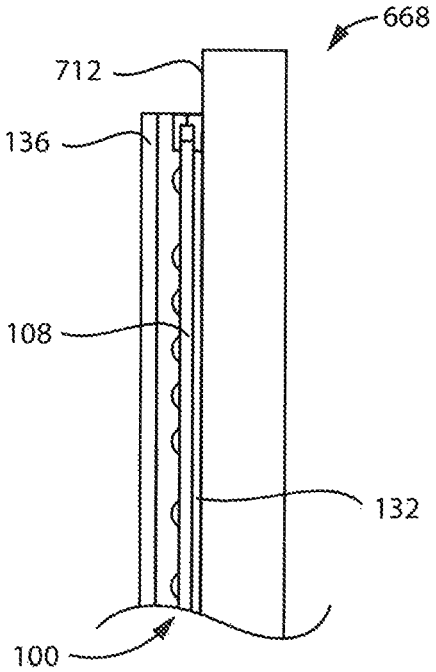


FIG. 175

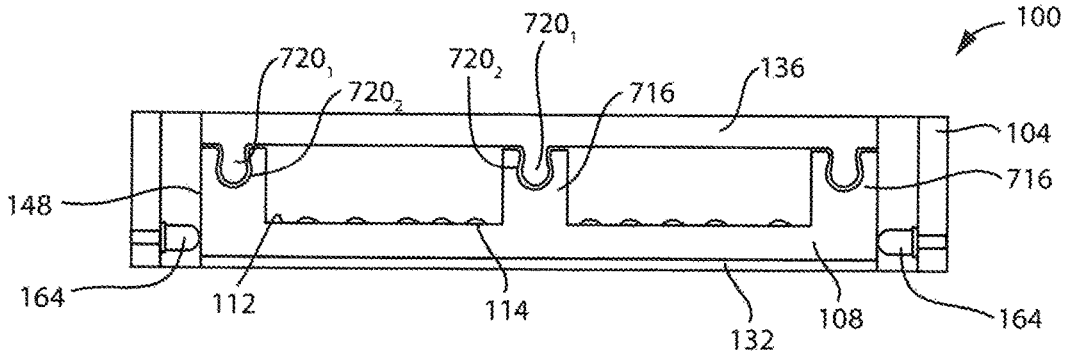


FIG. 176

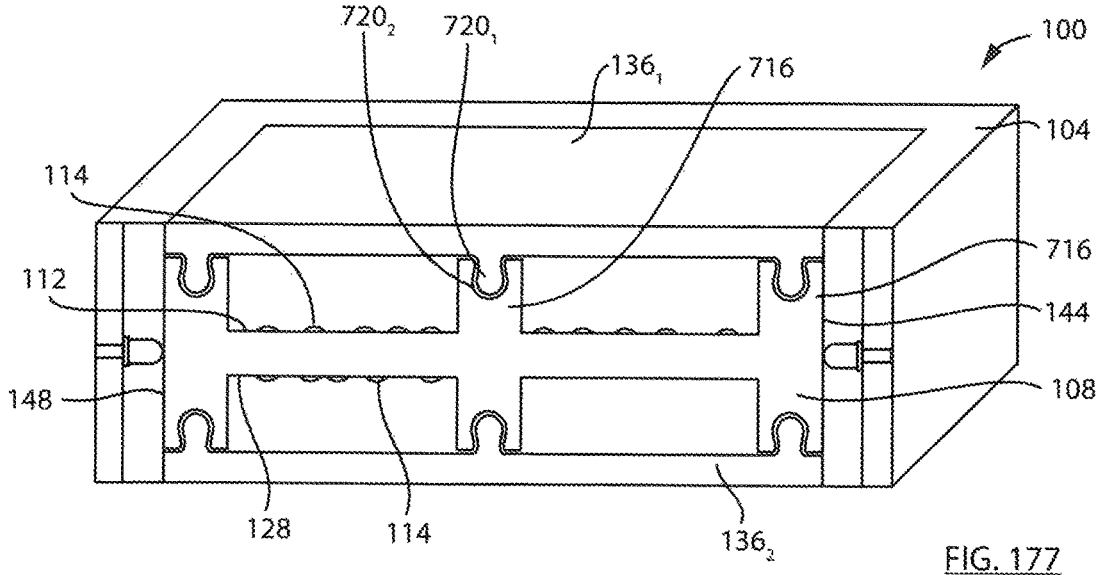


FIG. 177

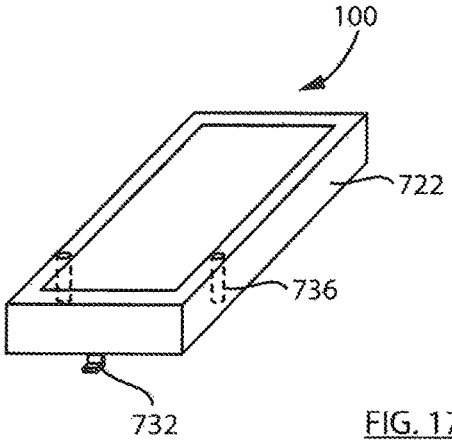


FIG. 179

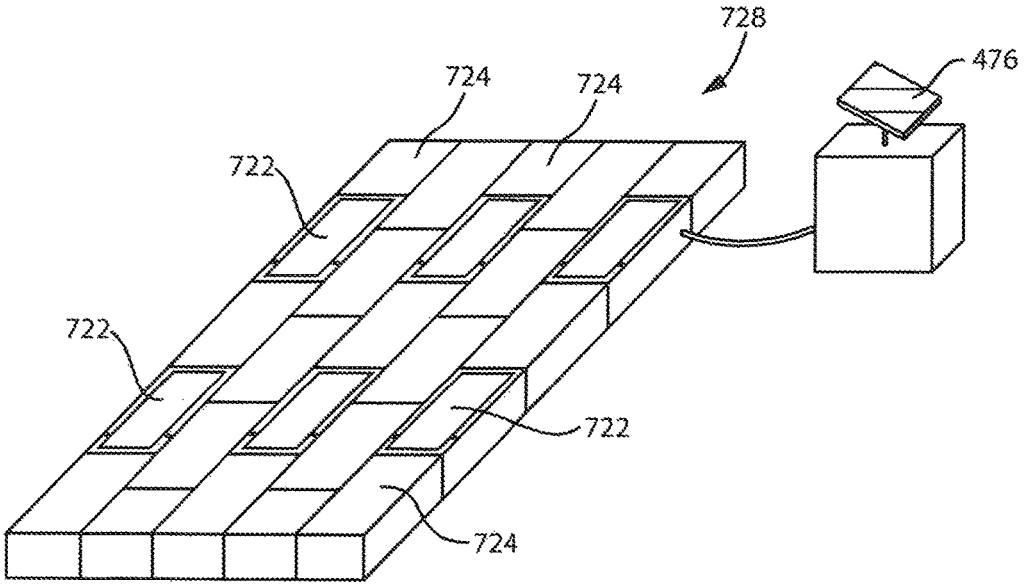


FIG. 178

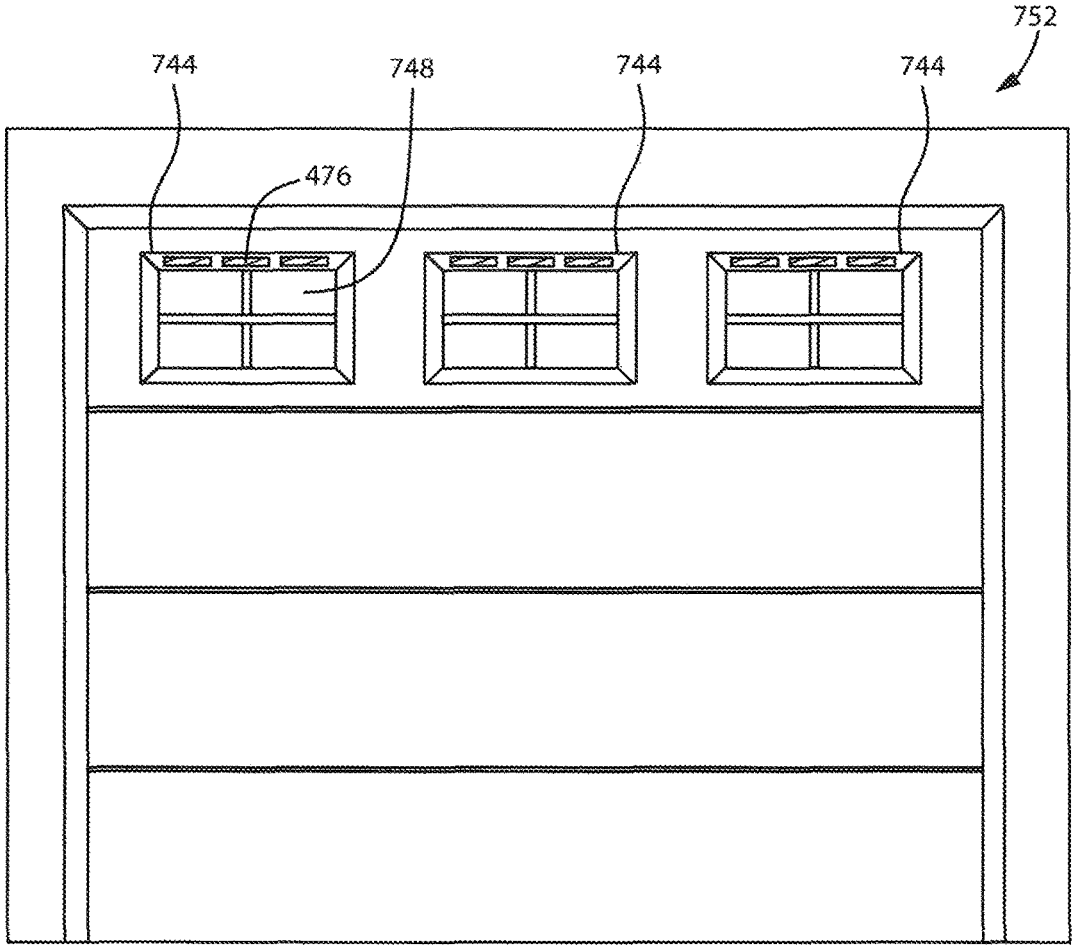


FIG. 180

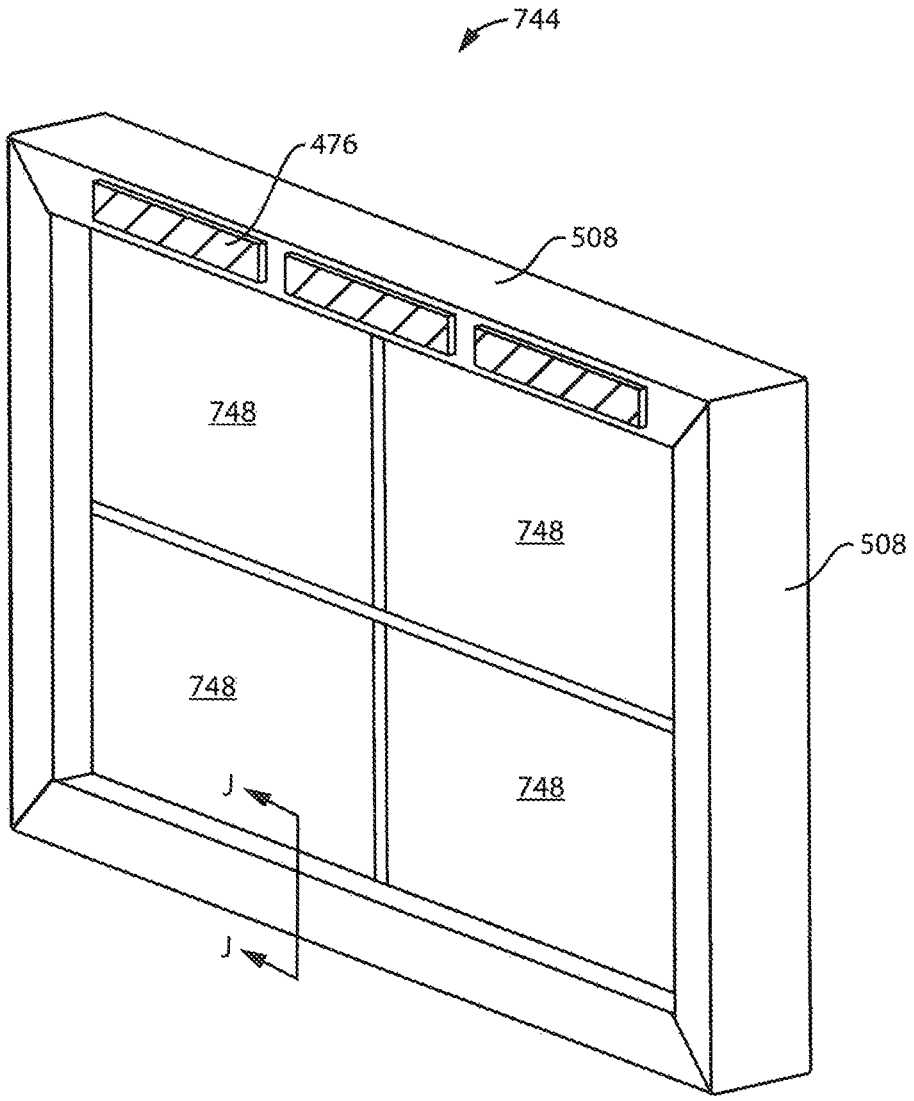


FIG. 181

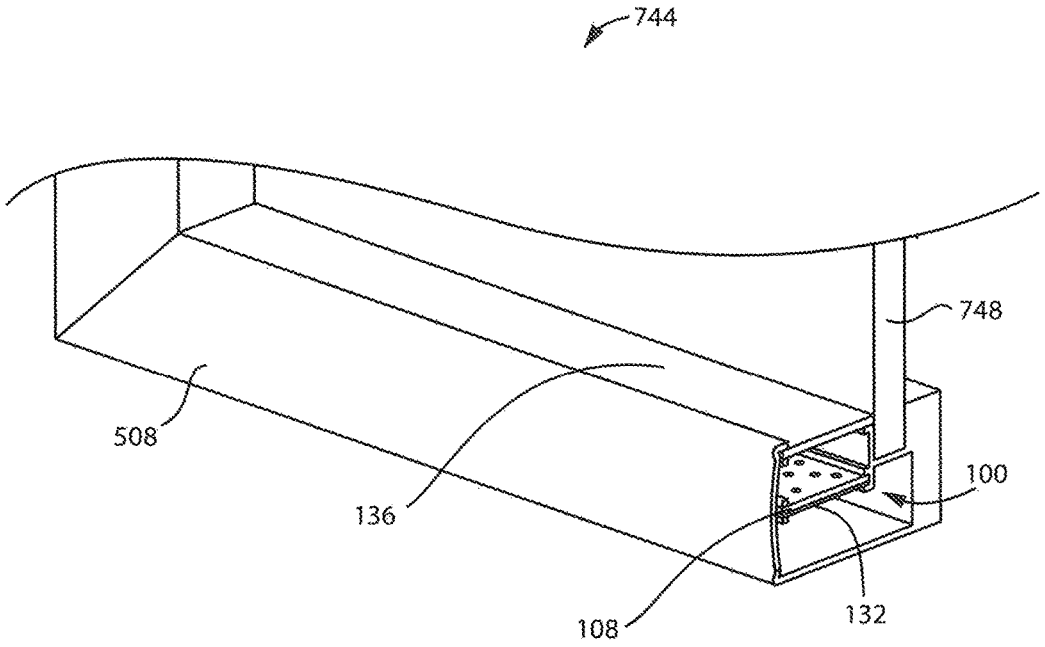


FIG. 182

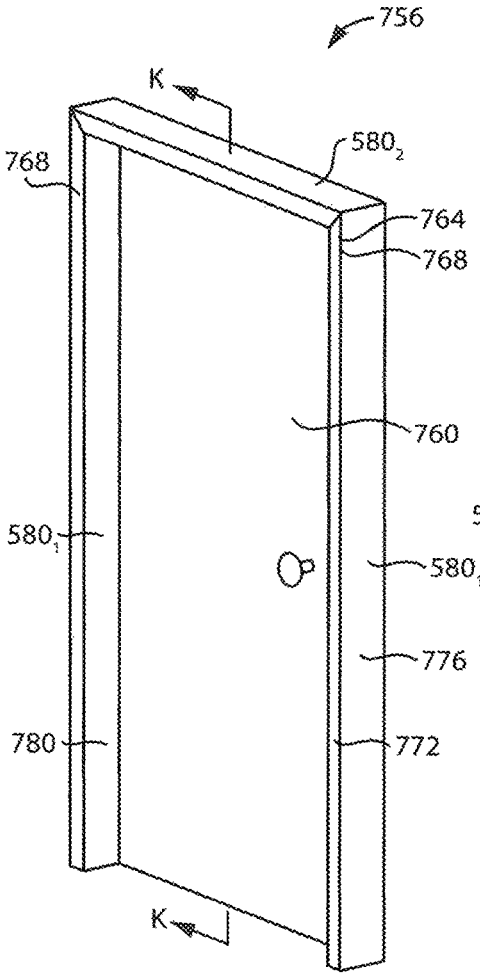


FIG. 183

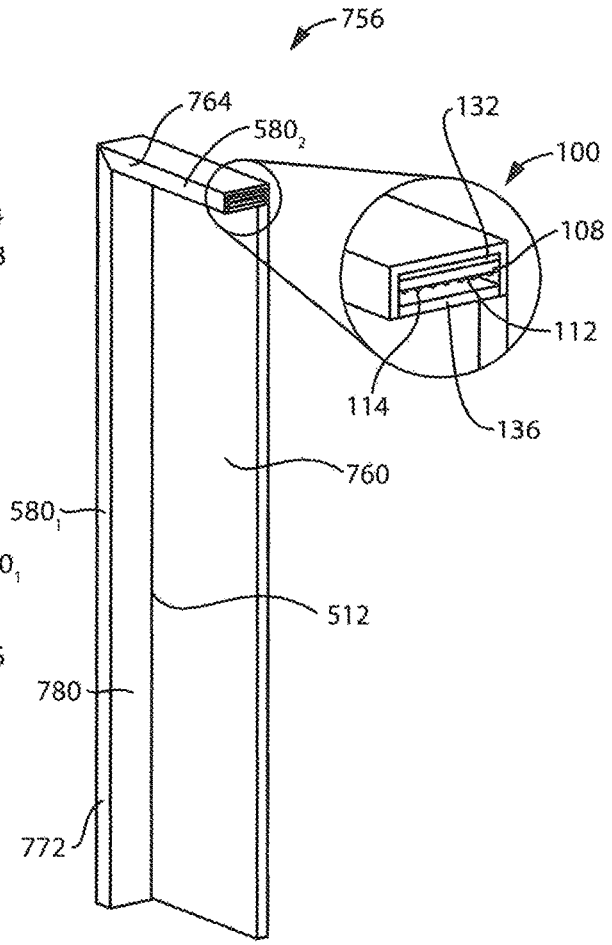


FIG. 184

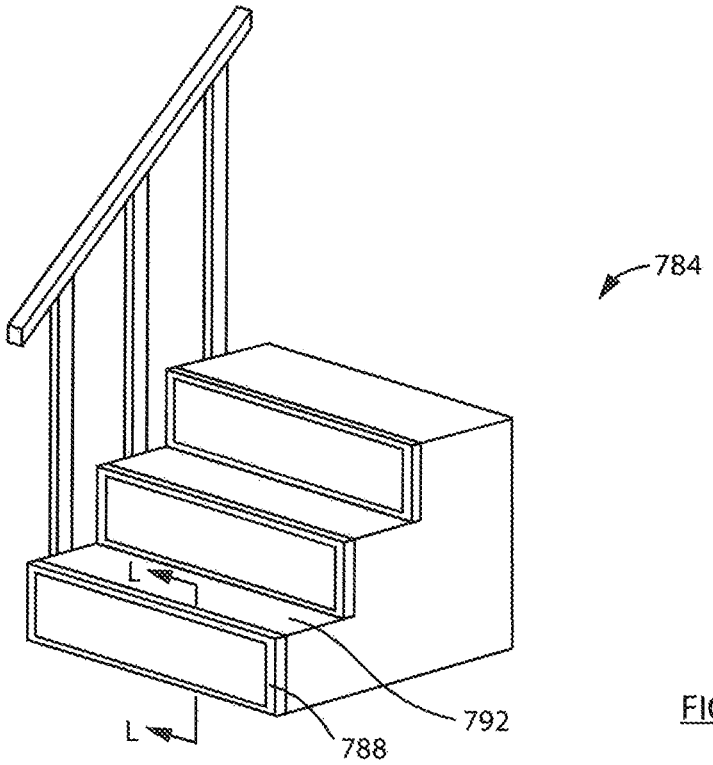


FIG. 185

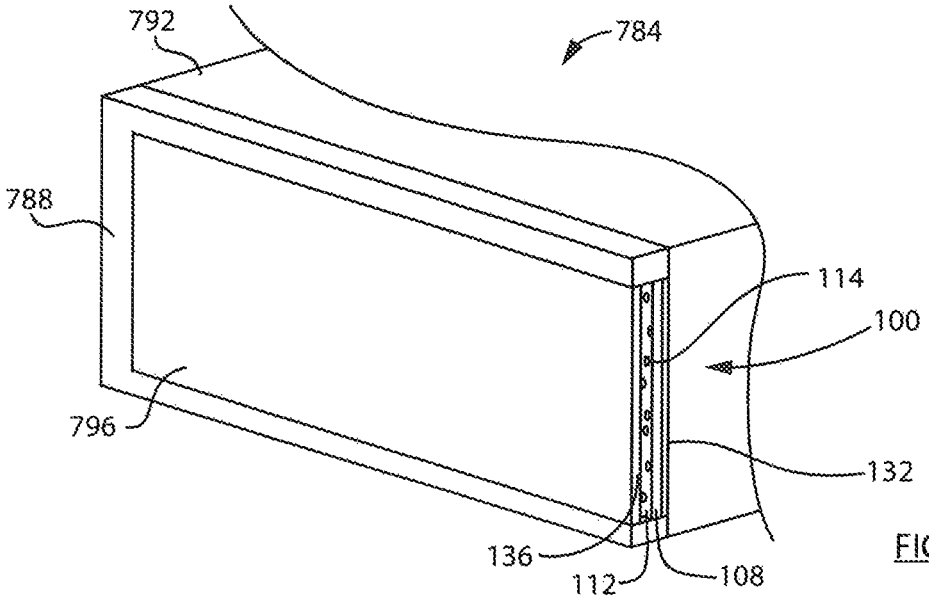


FIG. 186

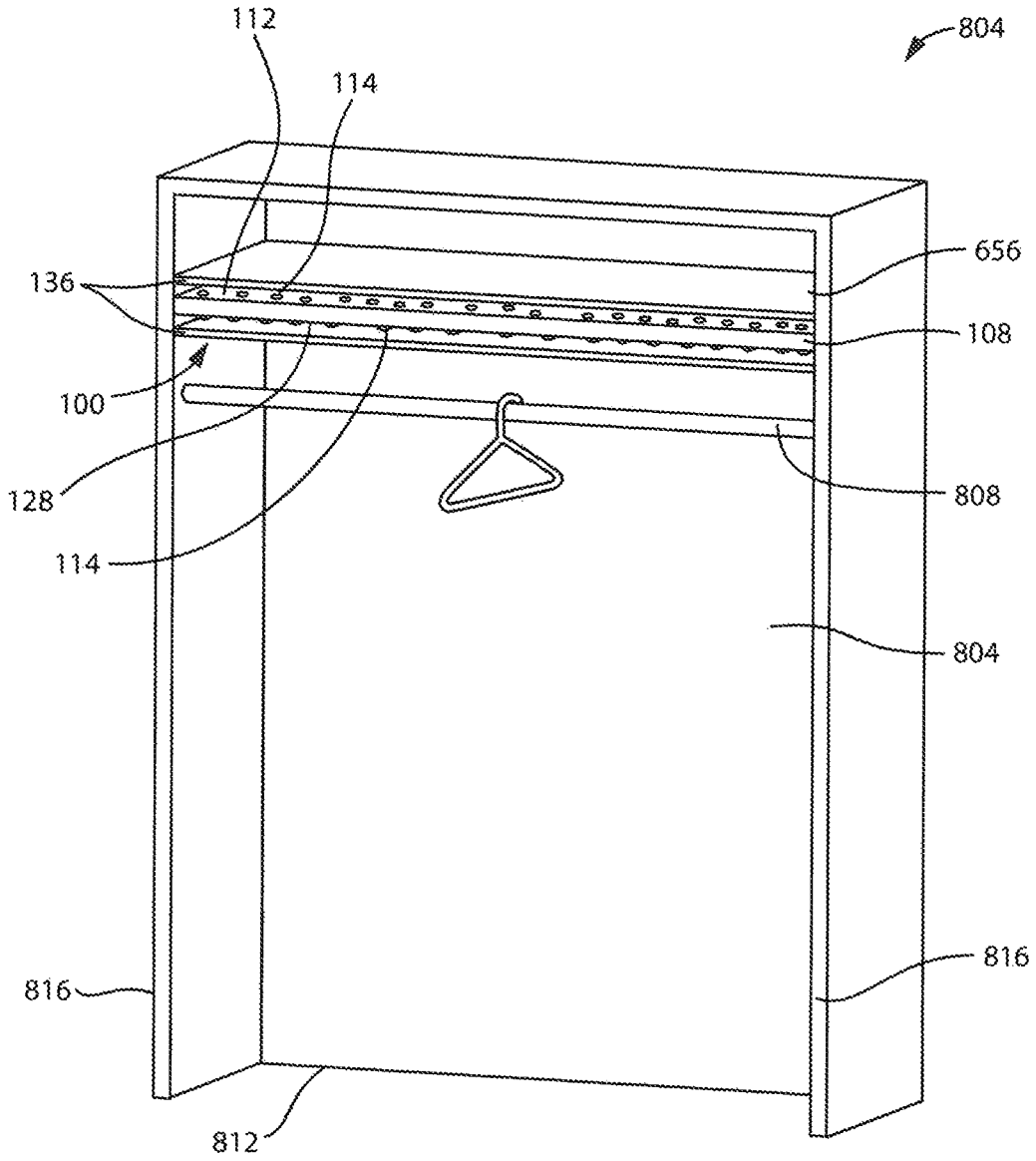


FIG. 187

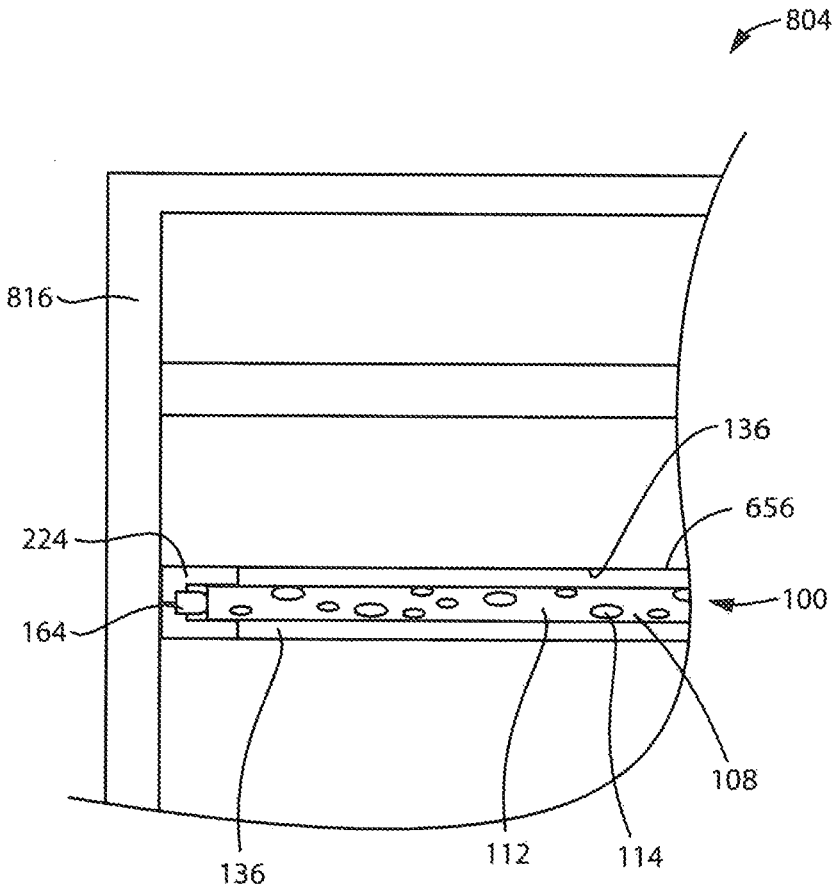


FIG. 188

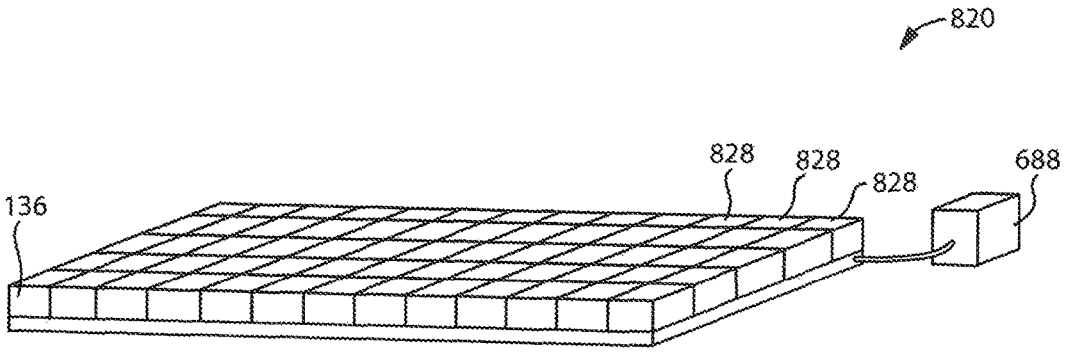


FIG. 189

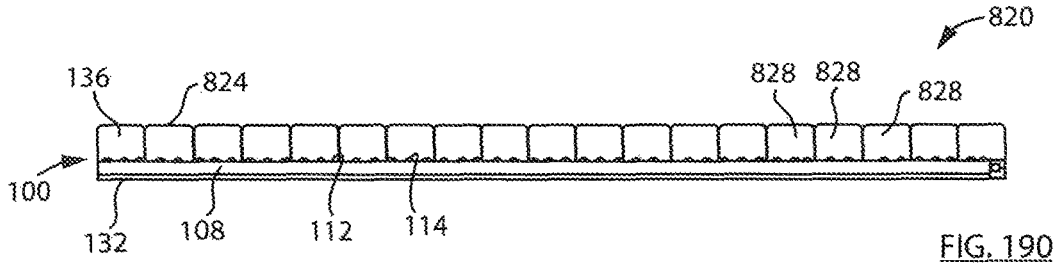


FIG. 190

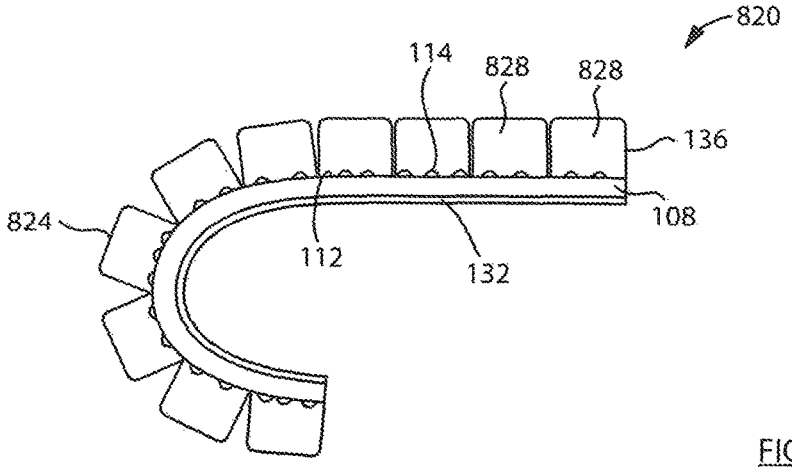


FIG. 191

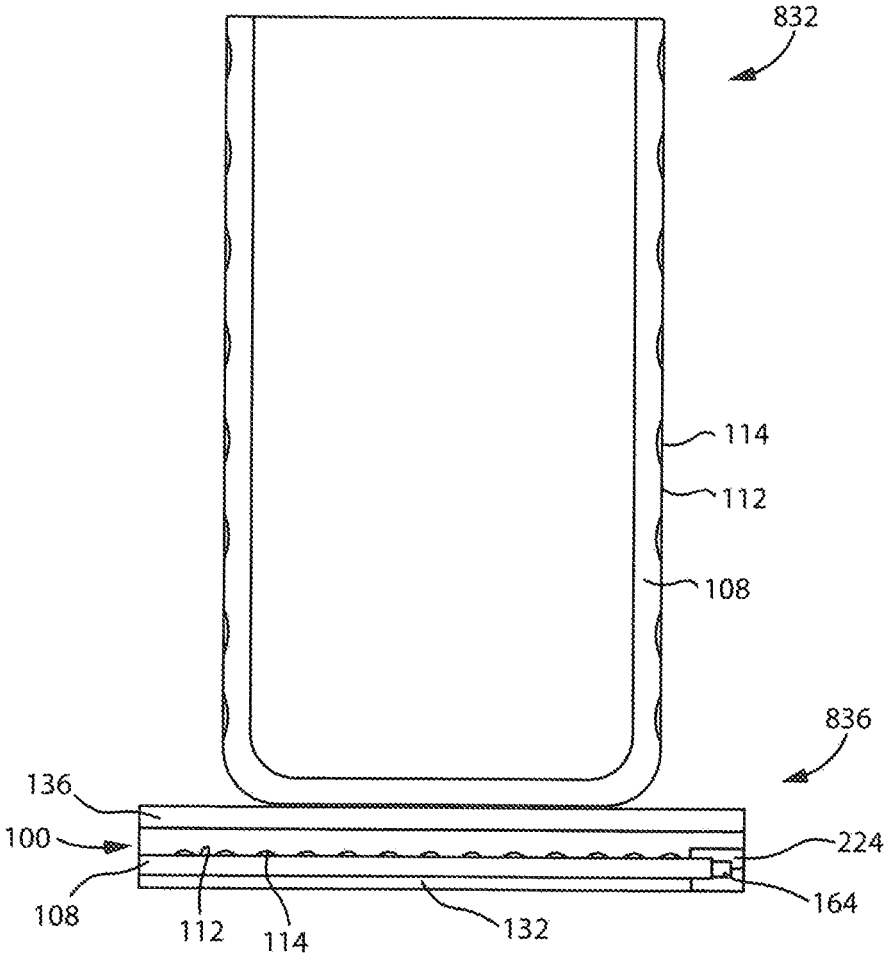


FIG. 192

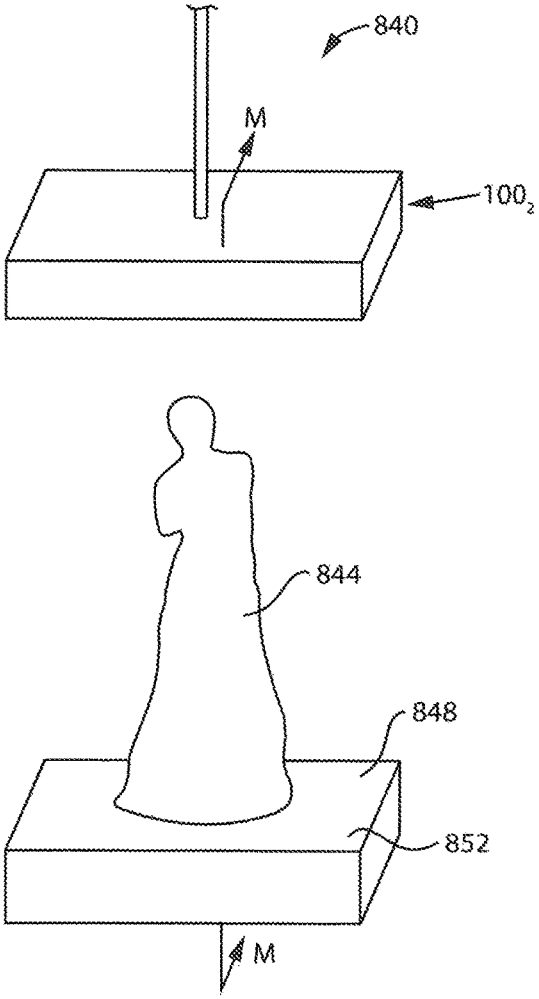


FIG. 193

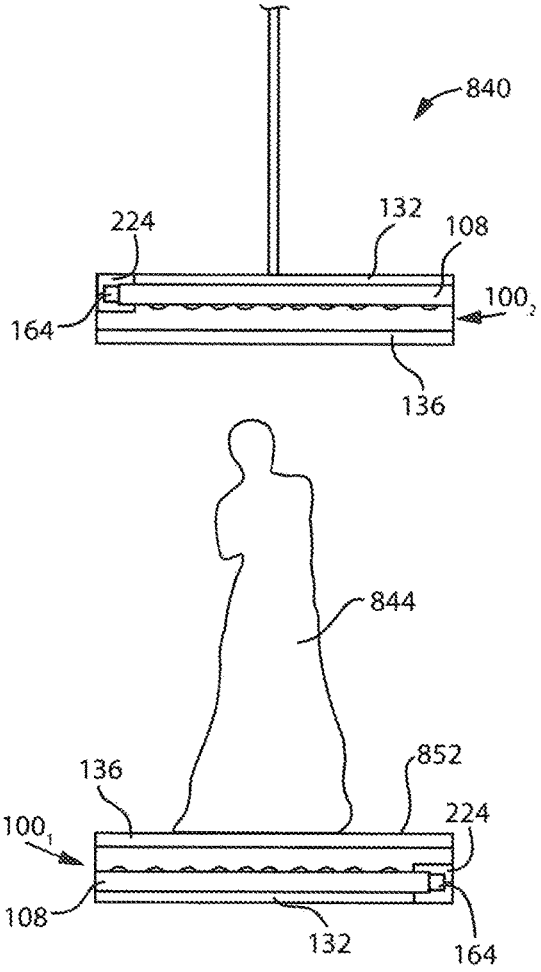


FIG. 194

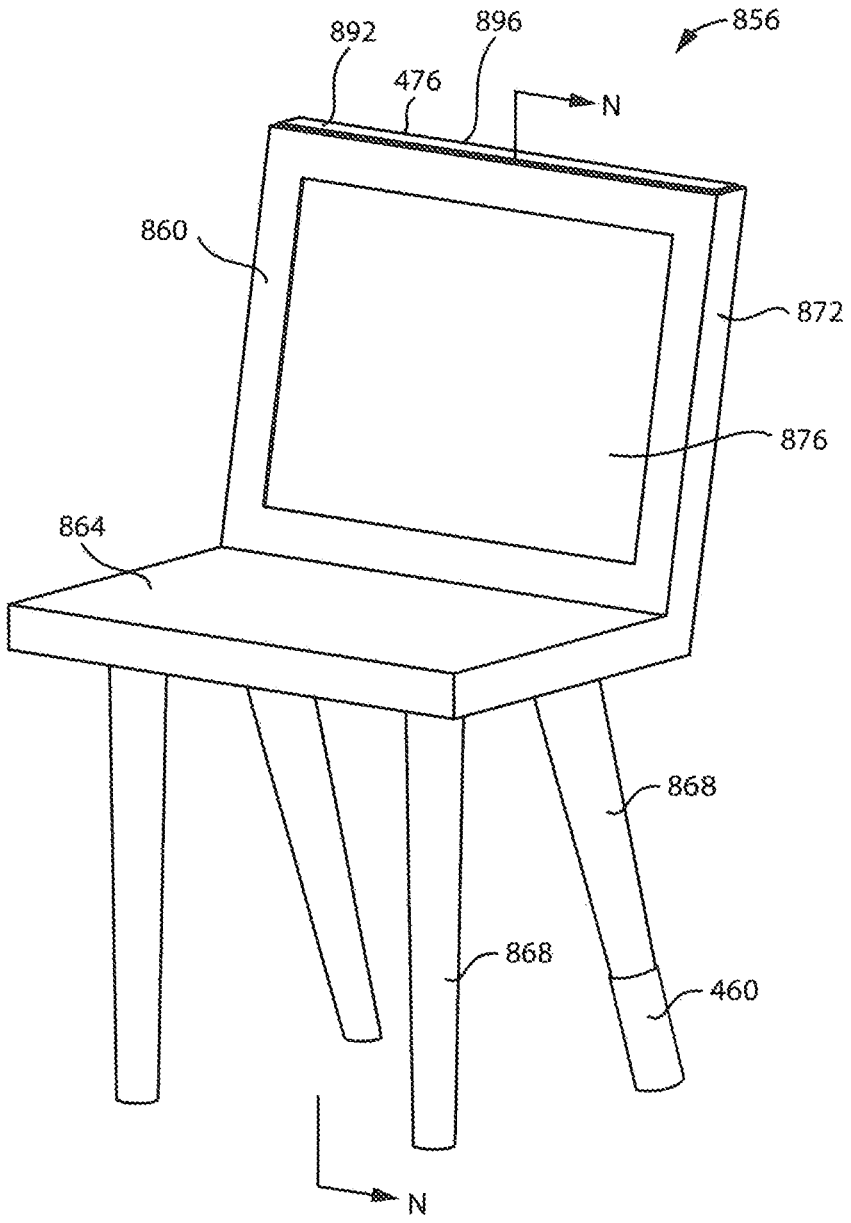


FIG. 195

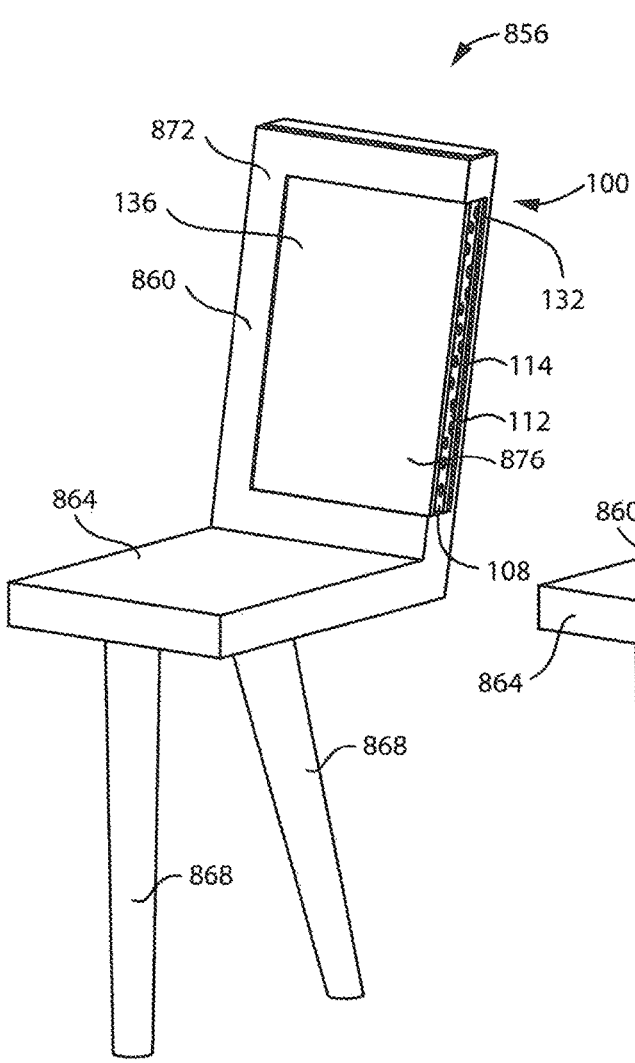


FIG. 196

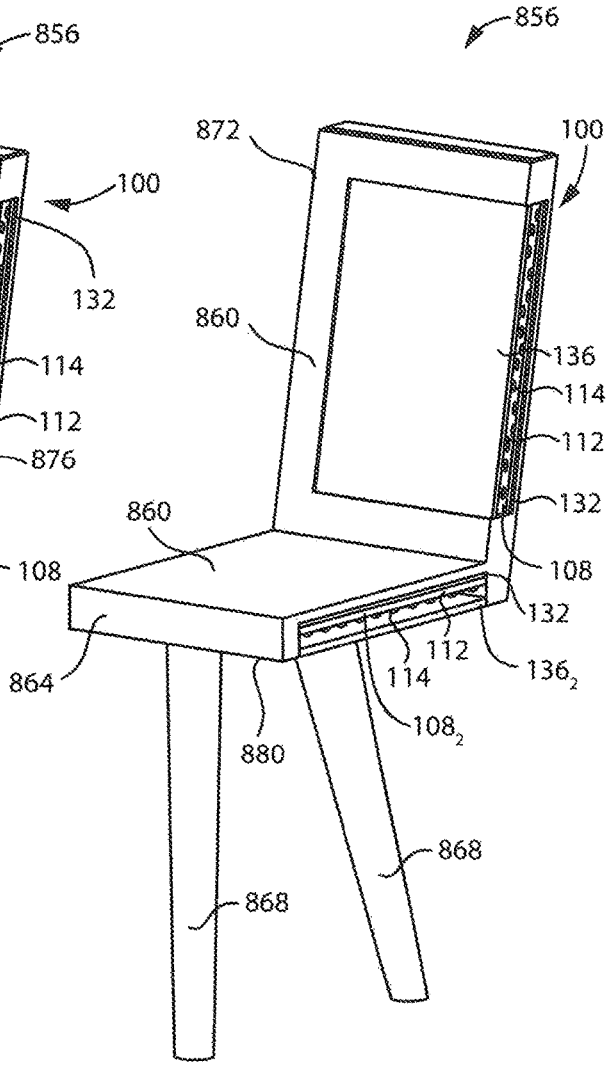


FIG. 197

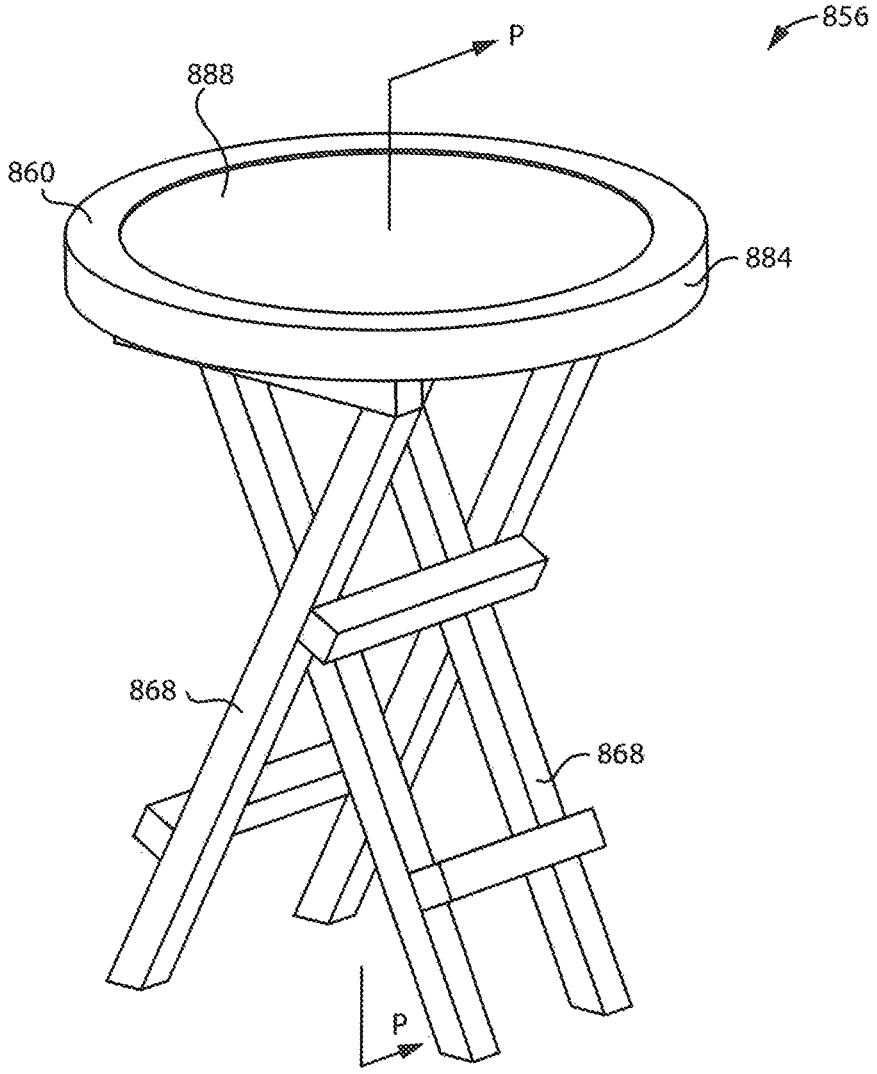


FIG. 198

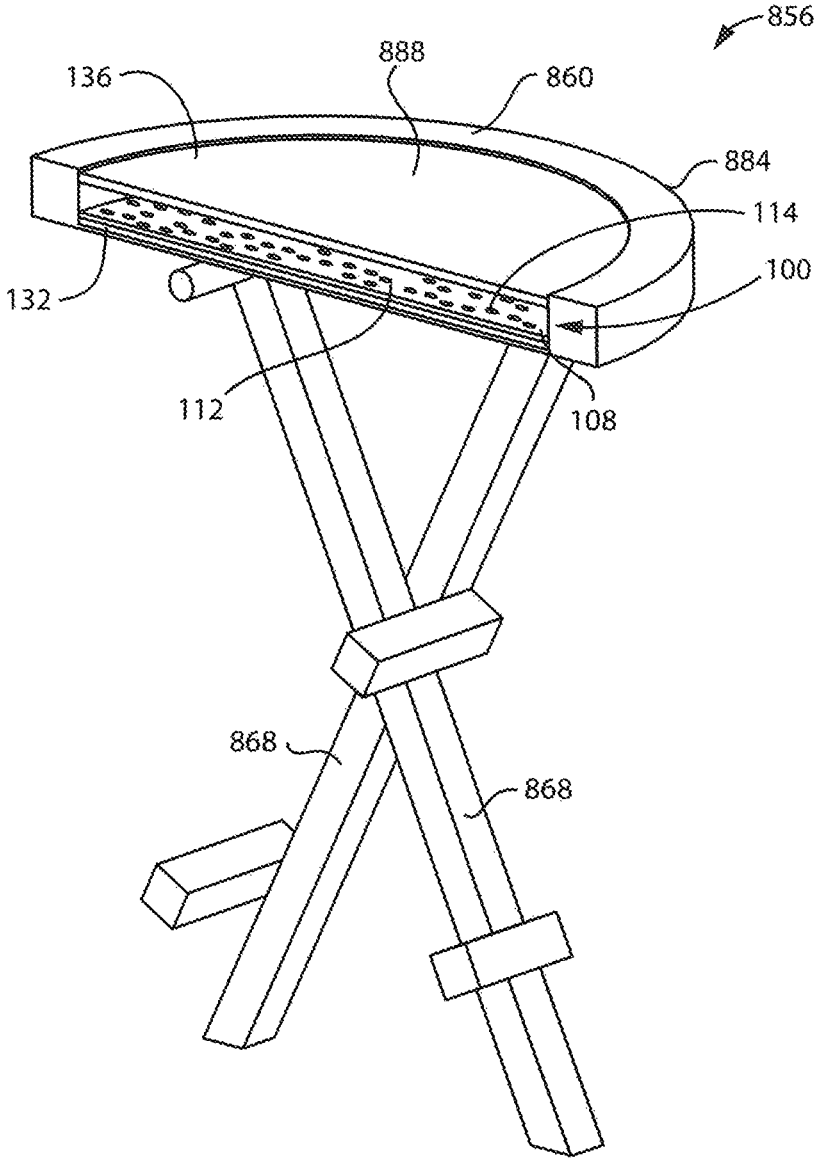


FIG. 199

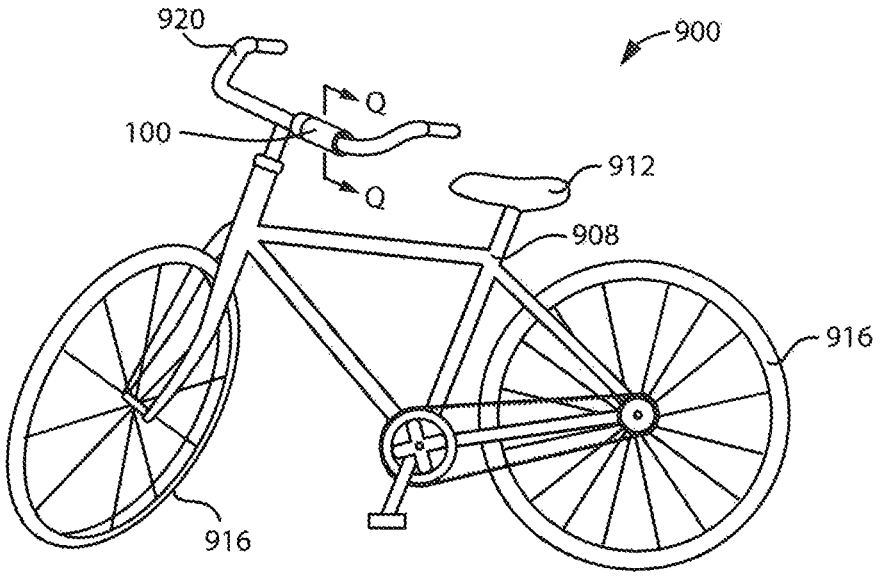


FIG. 200

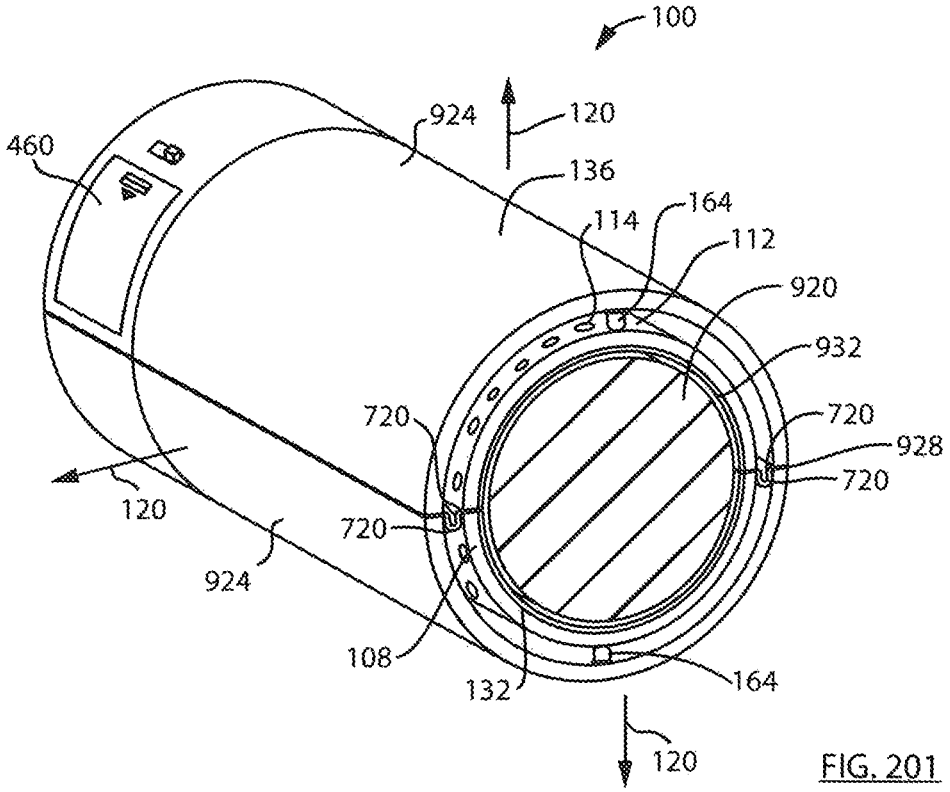


FIG. 201

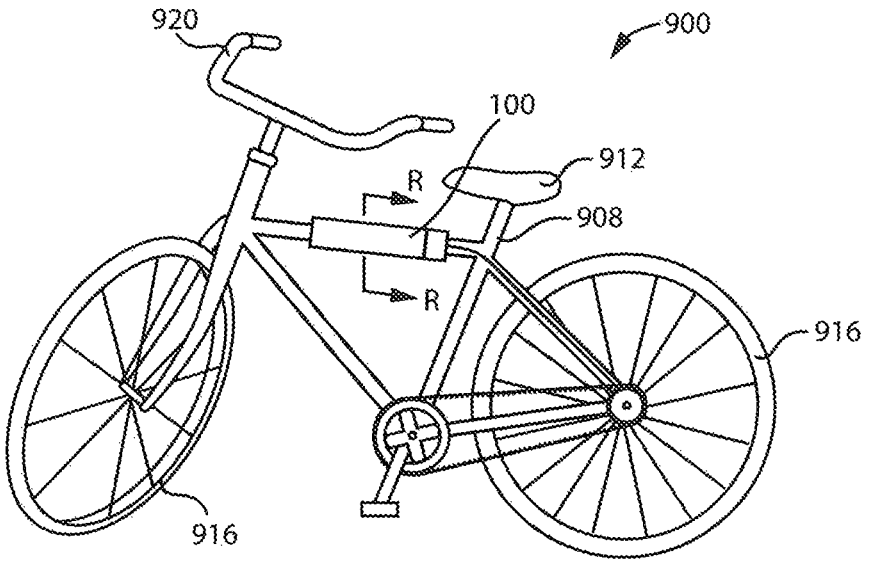


FIG. 202

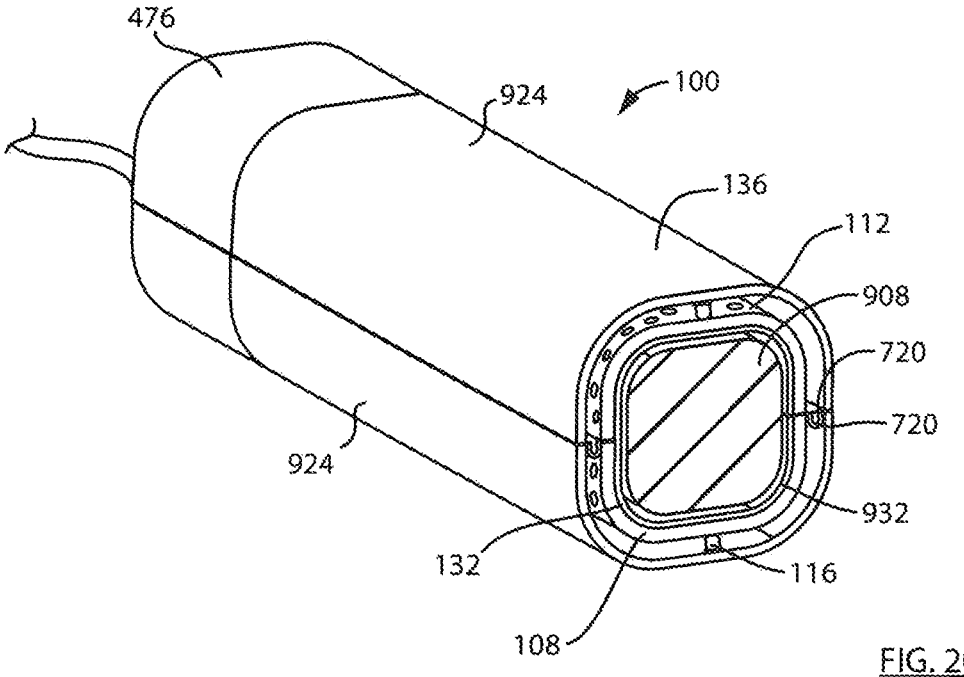


FIG. 203

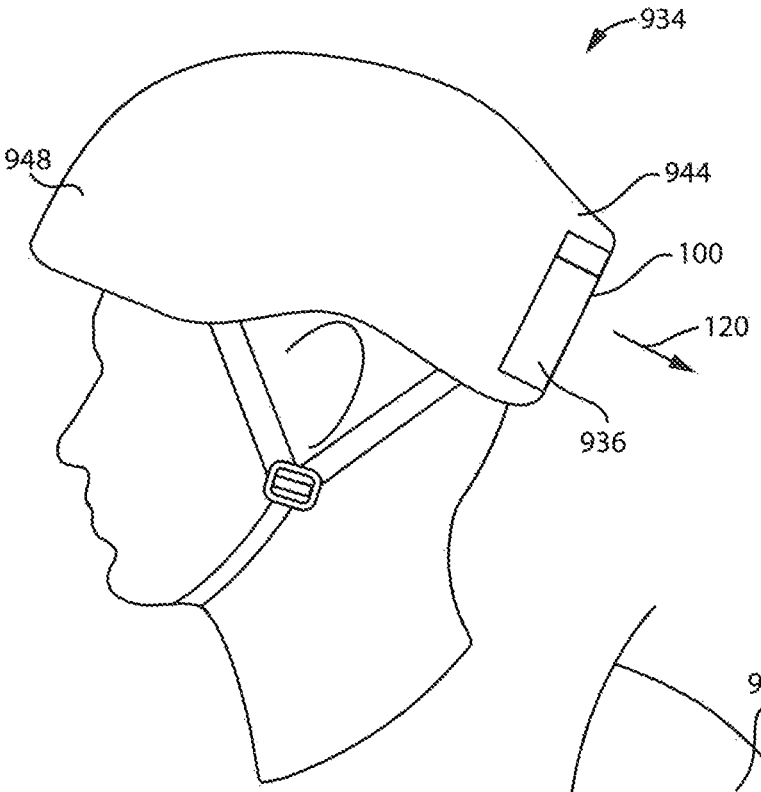


FIG. 204

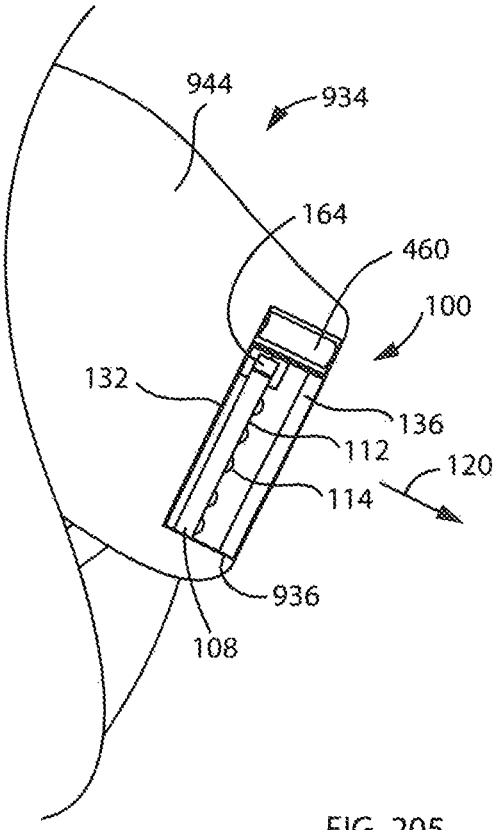


FIG. 205

# LED LIGHT SOURCE

## FIELD

This application relates to the field of LED light sources and apparatus including the same.

## INTRODUCTION

A light-emitting diode (LED) is a semiconductor light source that emits light when activated. Generally, LEDs have lower energy consumption and longer lifespans as compared with traditional light sources, such as incandescent and halogen lights.

## SUMMARY

In one aspect, a LED light source is provided. The LED light source, may include a longitudinally extending first light guide, a housing, and a cartridge. The first light guide having a longitudinally extending light emitting face, the light emitting face having a first end face and a longitudinally spaced apart second end face. The housing having a first recess, the recess having a first side proximate the first end face of the first light guide and a longitudinally spaced apart opposed face, the first recess extending generally transverse to the first light guide from an insertion end to a transversely spaced apart inner end. The cartridge slideably receivable in the first recess and having a plurality of LEDs on a first face of the cartridge, the first face extending generally transverse to the first light guide when the cartridge has been inserted into the first recess, the first face having an inner end and an outer end. The cartridge may be movable from an insertion position in which the inner end of the first face of the cartridge is spaced from the first side of the first recess when the inner end of the first face of the cartridge is positioned at the insertion end, to an inserted position in which the first face of the cartridge is adjacent the first side of the first recess when the cartridge is inserted into the first recess.

In some embodiment, the LED light source further includes a biasing member biasing the cartridge to the inserted position.

In some embodiments, the first recess includes a cam member whereby, as the cartridge is inserted into the first recess, the cartridge is guided towards the inserted position.

In some embodiments, the LED light source may further include a biasing member biasing the cartridge to the inserted position.

In some embodiments, the cartridge is rigid and the biasing member is provided at the inner end of the first recess whereby a biasing force provided by the biasing member when the cartridge is in the inserted position biases the outer end of the cartridge to a position proximate the light guide.

In some embodiments, the LED light source may further include a driving member moveably mounted in the housing and driving the cartridge from a position in which the first face of the cartridge is spaced from the first side of the first recess to the inserted position.

In some embodiments, the LEDs are provided only on the first face of the cartridge.

In some embodiments, the LED light source may further include a second light guide having an first end face and a longitudinally extending light emitting face, wherein the first recess has a third side proximate the first end face of the second light guide and the LEDs are also provided on a



second face of the cartridge, wherein when the cartridge is in the inserted position, the second face of the cartridge is adjacent the third side of the first recess.

In some embodiments, the light guides extend in different directions.

In some embodiments, the light guides extend in different directions that re about 90° apart.

In some embodiments, the cartridge further includes a heat sink.

In some embodiments, the cartridge further includes the heat sink.

In some embodiments, the cartridge further includes a substrate, the LEDs are provided on the substrate and the substrate is removable from the heat sink.

In some embodiments, the heat sink is provided in the housing and the cartridge has a side in thermal contact with the heat sink when the cartridge is in the inserted position.

In some embodiments, the LED light source may further include a second light guide extending in the same direction as the first light guide, the second light guide having a first end face and a longitudinally extending light emitting face oriented in the same direction as the light emitting face of the first light guide, and the housing further includes a second recess which slideably receives another cartridge having LEDs on a face thereof.

In some embodiments, the second recess is positioned proximate the first recess and, when inserted the LEDs of the first cartridge face an opposed direction to the LEDs of the second cartridge.

In some embodiments, the second recess is positioned spaced from the first recess and, when inserted the LEDs of the first cartridge face a first direction and the LEDs of the second cartridge face the first direction.

In some embodiments, the LED light source may further include a second recess positioned at the second end face of the first light emitting member and, when inserted, the LEDs of the first cartridge face an opposed direction to the LEDs of the second cartridge.

In another aspect, a LED light source is provided. The LED light source includes a longitudinally extending first light guide, a housing, and a cartridge. The first light guide has a longitudinally extending light emitting face, the light emitting face having a first end face and a longitudinally spaced apart second end face. The housing has a first side proximate the first end face of the first light guide. The cartridge is mountable to the first side of the housing and has at least one LED on a first face of the cartridge, the first face extending generally transverse to the first light guide when the cartridge has been mounted to the housing. When the cartridge is mounted to the first side of the housing, the first face of the cartridge is adjacent the first end face.

In some embodiments, the cartridge has mechanical engagement members which are releasably securable to mating mechanical engagement members of the housing.

In some embodiments, the LED light source may further include at least one screw member that releasably secures the cartridge to the first side of the housing.

In some embodiments, the screw members are non-removably secured to the housing.

In another aspect, a LED light bulb is provided. The LED light bulb may include an engagement end electrically connectable to a socket; a housing having a light transmitting surface and an interior; and, a cartridge removably receivable in the interior and having a plurality of LEDs.

In some embodiments, the LED light bulb has a first recess, the recess having an insertion end proximate an outer

surface of the LED light bulb and a longitudinally spaced apart inner end and the cartridge is slideably receivable in the first recess.

In some embodiments, the plurality of LEDs are provided on a first face of the cartridge.

In some embodiments, the LEDs are provided on a plurality of faces of the cartridge.

In some embodiments, the cartridge is generally cylindrical in shape.

In some embodiments, the recess is provided in the engagement end.

In some embodiments, the recess is provided in the housing.

In some embodiments, the housing includes a light guide and the LEDs are positioned against an end of the light guide when installed in the LED light bulb.

In some embodiments, all of an exterior of the housing is made of a material having a light transmitting surface.

In some embodiments, the LED light bulb is in the shape of an incandescent or halogen light bulb.

In another aspect, a LED light source is provided. The LED light source may include a longitudinally extending light guide having a longitudinally extending light emitting face having a length, a first end face and a longitudinally spaced apart second end face and a LED light source is provided at least at the first end face. The light emitting face has a plurality of light emitting locations provided thereon. The density of the light emitting locations increases from the first end face towards the second end face.

In some embodiments, a first LED light source is provided at the first end face and a second LED light source is provided at the second end face wherein the density of the light emitting locations increases from each of the first end face and the second end face to a middle of the light emitting face.

In some embodiments, the light emitting locations are positioned to provide a generally even level of illumination along the length of the light emitting surface.

In some embodiments, a level of illumination provided at the middle of the light emitting surface is ±20% of a level of illumination provided at the first end face.

In some embodiments, a level of illumination provided at the middle of the light emitting surface is ±10% of a level of illumination provided at the first end face.

In some embodiments, an image is provided in front of at least a portion of the light emitting face and the light emitting locations are positioned such that a person viewing the image views a generally evenly illuminated image.

In some embodiments, the image has at least area that has at least one of a different colour or a different density of the image and the light emitting locations are positioned such that a person viewing the image views a generally evenly illuminated image.

In some embodiments, the LED light source is provided only at the first end face wherein the density of the light emitting locations increases from the first end face to the second end face.

In some embodiments, the light emitting locations are positioned to provide a generally even level of illumination along the length of the light emitting surface.

In some embodiments, a level of illumination provided at the second end face of the light emitting surface is ±20% of a level of illumination provided at the first end face.

In some embodiments, a level of illumination provided at the second end face of the light emitting surface is ±10% of a level of illumination provided at the first end face.

In some embodiments, the light emitting locations comprise discontinuities provided in the light emitting face.

In some embodiments, the light emitting locations comprise a light scattering material applied to the light emitting surface.

In some embodiments, the light emitting locations comprise a fluorescent material.

In another aspect, a frame for a work of art is provided. The frame may include at least one side panel extending around a perimeter and defining an inner opening in which the work of art is displayable. The at least one side panel may include a longitudinally extending light guide having a longitudinally extending light emitting face that faces inwards towards another portion of the at least one side panel. The longitudinally extending light emitting face has a length, a first end face and a longitudinally spaced apart second end face and a LED light source is provided at least at the first end face. The light emitting face has a plurality of light emitting locations provided thereon. The density of the light emitting locations increases from the first end face towards the second end face.

In some embodiments, the fame is in the shape of a parallelogram and includes four side panels, each of which includes a longitudinally extending light guide having a light emitting face that faces onwards.

In some embodiments, each light emitting face has an inner side positioned proximate a plane in which the work of art seats when mounted in the frame and a spaced apart outer side and the inner side is position forward of the plane.

In some embodiments, the light emitting face has an inner side positioned proximate a plane in which the work of art seats when mounted in the frame and a spaced apart outer side and the inner side is position forward of the plane.

In some embodiments, a first LED light source is provided at the first end face and a second LED light source is provided at the second end face wherein the density of the light emitting locations increases from each of the first end face and the second end face to a middle of the light emitting face.

In some embodiments, the LED light source is provided only at the first end face wherein the density of the light emitting locations increases from the first end face to the second end face.

In another aspect, a backlight frame for a work of art is provided. The backlight frame may include a frame member extending around a perimeter and defining an inner opening in which the work of art is displayable, and a longitudinally extending light guide positioned rearward of the opening and facing towards the opening. The longitudinally extending light guide has a longitudinally extending light emitting face having a length, a first end face and a longitudinally spaced apart second end face and a LED light source is provided at least at the first end face. The light emitting face has a plurality of light emitting locations provided thereon. The density of the light emitting locations increases from the first end face towards the second end face.

In some embodiments, a first LED light source is provided at the first end face and a second LED light source is provided at the second end face wherein the density of the light emitting locations increases from each of the first end face and the second end face to a middle of the light emitting face.

In some embodiments, the LED light source is provided only at the first end face wherein the density of the light emitting locations increases from the first end face to the second end face.

In some embodiments, the work of art that transmits light is provided in front of at least a portion of the light emitting face and the light emitting locations are positioned such that a person viewing the work of art views a generally evenly illuminated work of art.

In some embodiments, the work of art has at least area that has at least one of a different colour or a different density of the image and the light emitting locations are positioned such that a person viewing the work of art views a generally evenly illuminated work of art.

In some embodiments, the light emitting locations comprise a fluorescent material.

In another aspect, a frame for a work of art is provided. The frame may include at least one side panel defining an inner opening in which the work of art is displayable, the inner opening extending in a plane, the at least one side panel including a longitudinally extending light guide having a longitudinally extending light emitting face that faces inwards towards the inner opening in a direction generally parallel to the plane. The light emitting face has an inner side positioned proximate the plane and a spaced apart outer side and at least one LED providing a light source for the light guide.

In some embodiments, the inner side of the light emitting face is spaced from the plane.

In some embodiments, the inner side of the light emitting face is spaced from 0.25 to 1 inch from the plane.

In some embodiments, the light guide has a first end face and a longitudinally spaced apart second end face and the light source is provided at least at the first end face.

In some embodiments, a first light source is provided at the first end face and a second light source is provided at the second end face.

In some embodiments, the fame is in the shape of a parallelogram and includes four side panels, each of which includes a longitudinally extending light guide having a longitudinally extending light emitting face that faces inwards towards the inner opening in a direction generally parallel to the plane, each light emitting face has an inner side positioned proximate the plane and a spaced apart outer side.

In some embodiments, the light emitting faces are positioned forward of the plane.

In some embodiments, the fame includes a plurality of side panels which meet at corners, at least some of the side panels comprise a longitudinally extending light guide having a longitudinally extending light emitting face that faces inwards towards the inner opening in a direction generally parallel to the plane, each light emitting face has a first end face and a longitudinally spaced apart second end face and the light source is provided at least at the first end face, wherein the light sources are provided in corners of the parallelogram.

In some embodiments, the fame is in the shape of a parallelogram, each of the side panels includes a longitudinally extending light guide and the light sources are provided in the corners of the parallelogram.

In some embodiments, the frame may further include a sensor that detects a condition in a space in front of a location in which the frame is located and a controller that adjusts at least one of a level of intensity of light emitted by the light source and the colour of light emitted by the light source based upon a signal provided by the sensor.

In some embodiments, the condition includes at least one of a level of illumination, a colour of illumination, motion of a body, a noise level, a signal issued by a person.

In some embodiments, the light source includes LEDs of at least two different colours.

In some embodiments, the frame may further include a manually actuatable switch operatively connected to the light source wherein operation of the switch adjusts at least one of a level of intensity of light emitted by the light source and the colour of light emitted by the light source based upon a signal provided by the switch.

In some embodiments, the frame may further include an energy storage member.

In some embodiments, the energy storage member includes a rechargeable battery.

In some embodiments, the at least one LED is operable to selectively emit one or more colours of light.

In some embodiments, the at least one LED is operable to selectively illuminate part of a work of art placed in the fame.

In another aspect, a backlight frame for a work of art is provided. The backlight frame may include a frame member that defines an inner opening in which the work of art is displayable, the inner opening extending in a plane, and a longitudinally extending light guide positioned rearward of the opening and facing towards the opening. The longitudinally extending light guide has a longitudinally extending light emitting face spaced rearward of the plane and having a length, a first end face and a longitudinally spaced apart second end face and a LED light source is provided at least at the first end face.

In some embodiments, the light emitting face is spaced rearward from the plane.

In some embodiments, the light emitting face is spaced from 0.25 to 1 inch from the plane.

In some embodiments, the light guide has a first end face and a longitudinally spaced apart second end face and the LED light source is provided at least at the first end face.

In some embodiments, a first light source is provided at the first end face and a second light source is provided at the second end face.

In some embodiments, the frame may further include a sensor that detects a condition in a space in front of a location in which the frame is located and a controller that adjusts at least one of a level of intensity of light emitted by the light source and the colour of light emitted by the light source based upon a signal provided by the sensor.

In some embodiments, the condition includes at least one of a level of illumination, a colour of illumination, motion of a body, a noise level, a signal issued by a person.

In some embodiments, the light source includes LEDs of at least two different colours and

In some embodiments, the frame may further include a manually actuatable switch operatively connected to the light source wherein operation of the switch adjusts at least one of a level of intensity of light emitted by the light source and the colour of light emitted by the light source based upon a signal provided by the switch.

In some embodiments, the frame may further include an energy storage member.

In some embodiments, the energy storage member includes a rechargeable battery.

In some embodiments, the at least one LED is operable to selectively emit one or more colours of light.

In some embodiments, the at least one LED is operable to selectively illuminate part of a work of art placed in the fame.

In another aspect, a LED light source is provided. The LED light source may include a longitudinally extending light guide, at least one LED, and a diffuser. The longitu-

dinally extending light guide may have a first longitudinally extending light emitting face, the first light emitting face having a first end face, a longitudinally spaced apart second end face, and first and second side faces extending between the first and second end faces. The at least one LED is provided at the first end face. The diffuser includes a central panel that is spaced from and facing the first light emitting face.

In some embodiments, the central panel of the diffuser is positioned from 0.25 to 3 inches from the light emitting surface.

In some embodiments, the diffuser is composed of at least one of acrylic, polypropylene and polycarbonate, wherein the diffuser is at least translucent.

In some embodiments, the diffuser extends over the first and second side faces and the light emitting face.

In some embodiments, the diffuser is white.

In some embodiments, the central panel has a first end, a longitudinally spaced apart second end, and first and second sides each of which extends longitudinally between the first and second ends, and the diffuser further includes a first side panel extending between the first and second ends the central panel and provided on the first side of the central panel and a second side panel extending between the first and second ends the central panel and provided on the second side of the central panel.

In some embodiments, the light guide has a second light emitting face spaced from and opposed to the first light emitting face and facing in a direction opposed to a direction that the first light emitting member faces.

In some embodiments, the light guide has a longitudinally extending rear face spaced from and opposed to the first light emitting face, and the LED light source further includes a reflector facing the rear face.

In some embodiments, the reflector is spaced from the rear face.

In some embodiments, the reflector abuts the rear face.

In some embodiments, the reflector has a surface facing the rear face, wherein the surface is provided with a white coating.

In some embodiments, the white coating includes titanium dioxide.

In some embodiments, the LED light source may further include an image provided in front of the light emitting face, the image having at least one portion that has one or more of a different colour or light transmissivity, wherein a surface of the reflector facing the light guide has more than one colour and the colours are positioned to enhance the image when viewed by a user.

In some embodiments, a portion of the reflector has a colour selected to increase the visibility of the portion of the image.

In some embodiments, the reflector has a surface facing the rear face, wherein the surface is provided with a UV paint or fluorescent paint.

In some embodiments, the at least one LED is operable to selectively emit one or more colours of light.

In another aspect, a LED light source is provided. The LED light source includes a longitudinally extending light guide, at least one LED, and a reflector. The longitudinally extending light guide having a first longitudinally extending light emitting face, a longitudinally extending rear face spaced from and opposed to the first light emitting face, the first light emitting face having a first end face, a longitudinally spaced apart second end face, and first and second side faces extending between the first and second end faces. The at least one LED is provided at the first end face. The reflector faces the rear face.

In some embodiments, the reflector is spaced from the rear face.

In some embodiments, the reflector abuts the rear face.

In some embodiments, the reflector has a surface facing the rear face, wherein the surface is provided with a white coating.

In some embodiments, the white coating includes titanium dioxide.

In some embodiments, the white reflector has a surface facing the rear face, wherein the surface is provided with a UV paint.

In some embodiments, the LED light source may further include an image provided in front of the light emitting face, the image having at least one portion that has one or more of a different colour or light transmissivity, wherein a surface of the reflector facing the light guide has more than one colour and the colours are positioned to enhance the image when viewed by a user.

In some embodiments, a portion of the reflector has a colour selected to increase the visibility of the portion of the image.

In some embodiments, the at least one LED is operable to selectively emit one or more colours of light.

In another aspect, a LED light source is provided including a longitudinally extending light guide, and a power supply. The longitudinally extending light guide has a first end face and a longitudinally spaced apart second end face and at least one LED provided at the first end face. The power supply includes a plurality of batteries operatively connected to the at least one LED in a first mode in which the power supply provides a first power to the at least one LED and a second mode in which the power supply provides a second power different to the first power to the at least one LED.

In some embodiments, in the first mode, two or more of the batteries are connected in series.

In some embodiments, in the second mode, two or more of the batteries are connected in parallel.

In some embodiments, the plurality of batteries comprise a first battery and a second battery and, in the first mode, the first and second batteries are connected in series.

In some embodiments, in the second mode, the first and second the batteries are connected in parallel.

In some embodiments, the LED light source may further include a circuit which includes a sensor and the power supply whereby, when the sensor senses a condition, the sensor issues a signal which causes the power supply to change from the first mode to the second mode.

In some embodiments, the sensor includes a motion sensor.

In some embodiments, the sensor includes a noise sensor.

In some embodiments, the sensor includes a light intensity sensor.

In some embodiments, the LED light source may further include a manually operable switch operatively connected to the power supply, the switch having a first position in which the power supply is in the first mode and a second position in which the power supply is in the second mode.

In another aspect, a LED light source is provided. The LED light source includes a circuit including a plurality of LEDs. The LEDs are connected in parallel and each of the plurality of LEDs is individually electrically connected to the circuit by a meltable electrically conductive member.

In some embodiments, the meltable electrically conductive member includes fuse wire.

In some embodiments, the meltable electrically conductive member melts at a temperature corresponding to a temperature produced by a current drawn by a failed LED through the meltable electrically conductive member.

In some embodiments, the meltable electrically conductive member melts at a temperature above about 80 C.

In some embodiments, the meltable electrically conductive member includes fuse wire.

## BRIEF DESCRIPTION OF THE DRAWINGS

FIG. **1** is a perspective view of an LED light source in accordance with an embodiment;

FIG. **2** is an exploded view of the LED light source of FIG. **1**;

FIG. **3** is an exploded view of a housing end member of the LED light source of FIG. **1**;

FIG. **4** is a cross-sectional view taken along line **4-4** in FIG. **1**;

FIG. **5** is a cross-sectional view taken along line **5-5** in FIG. **1** and showing a cartridge in an inserted position;

FIG. **6** is a cross-sectional view taken along line **5-5** in FIG. **1** and showing the cartridge in an insertion position;

FIG. **7** is a cross-sectional view taken along line **5-5** in FIG. **1** and showing the cartridge being removed;

FIG. **8** is an exploded view of a housing end member in accordance with another embodiment;

FIG. **9** is a cross-sectional view of the housing end member of FIG. **8**, showing the cartridge in an inserted position;

FIG. **10** is a cross-sectional view of the housing end member of FIG. **8**, showing the cartridge in an insertion position;

FIG. **11** is a cross-sectional view of the housing end member of FIG. **8**, showing the cartridge being removed;

FIG. **12** is a cross-sectional view of an LED light source having the housing end member of FIG. **8**, and showing the cartridge in an inserted position.

FIG. **13**A is a perspective view of a housing end member in accordance with another embodiment;

FIG. **13**B is an exploded view of the housing end member of FIG. **13**A;

FIG. **14** is a cross-sectional view taken along line **14-14** in FIG. **13**A, showing a cartridge in an inserted position and a driving member in a first position;

FIG. **15** is a cross-sectional view taken along line **14-14** in FIG. **13**A, showing the cartridge in an insertion position and the driving member in a second position;

FIG. **16** is a perspective view of the housing end member of FIG. **13**A showing the driving member in the second position and the cartridge removed;

FIG. **17** is an exploded view of a housing end member in accordance with another embodiment;

FIG. **18** is a cross-sectional view of the housing end member of FIG. **17**, showing a cartridge in an inserted position and a driving member in a first position;

FIG. **19** is a cross-sectional view of the housing end member of FIG. **17**, showing the cartridge in an insertion position and the driving member in a second position;

FIG. **20** is a cross-sectional view of an LED light source in accordance with another embodiment;

FIG. **21** is an exploded view of a housing end member of the LED light source of FIG. **20**;

FIG. **22** is a cross-sectional view of the housing end member, taken along line **22-22** in FIG. **20**, showing a cartridge in an inserted position and a driving member in a first position;

FIG. **23** is a cross-sectional view of the housing end member, taken along line **23-23** in FIG. **20**, showing the cartridge in the inserted position and the driving member in the first position;

FIG. **24** is a cross-sectional view of the housing end member, taken along line **23-23** in FIG. **20**, showing the cartridge in the inserted position and the driving member in an intermediate position;

FIG. **25** is a cross-sectional view of the housing end member, taken along line **23-23** in FIG. **20**, showing the cartridge in the inserted position and the driving member in a second position;

FIG. **26** is a perspective view of the housing end member of the LED light source of FIG. **20**, showing the driving member in the second position and the cartridge removed;

FIG. **27** is a cross-sectional view of an LED light source in accordance with another embodiment;

FIG. **28** is an exploded view of a housing end member of the LED light source of FIG. **27**;

FIGS. **29-30** are cross-sectional views of the housing end member, taken along line **29-29** in FIG. **27**, showing a cartridge in the inserted position and a driving member in a first position;

FIG. **31** is a cross-sectional view of the housing end member, taken along line **29-29** in FIG. **27**, showing the cartridge in the inserted position and the driving member in a second position;

FIG. **32** is a perspective view of the housing end member of the LED light source of FIG. **27**, showing the driving member in the second position and the cartridge removed;

FIG. **33** is a cross-sectional view of an LED light source in accordance with another embodiment;

FIG. **34** is an exploded view of a housing end member of the LED light source of FIG. **33**;

FIG. **35** is a perspective view of the housing end member of FIG. **34** in an open condition;

FIG. **36** is a perspective view of a housing end member in a closed condition in accordance with another embodiment;

FIG. **37** is a perspective view of the housing end member of FIG. **36** in an open condition;

FIG. **38** is a cross-sectional view of an LED light source including the housing end member of FIG. **36**;

FIG. **39** is a perspective view of a housing end member in a closed condition, in accordance with another embodiment;

FIGS. **40-41** are perspective views of the housing end member of FIG. **39** in an open condition;

FIG. **42** is a cross-sectional view of an LED light source in accordance with another embodiment;

FIG. **43** is an exploded view of a housing end member of the LED light source of FIG. **42**;

FIG. **44** is a cross-sectional view of the housing end member of FIG. **43** showing a cartridge in an inserted position;

FIG. **45** is a cross-sectional view of the housing end member of FIG. **43** showing the cartridge in an insertion position;

FIG. **46** is a cross-sectional view of the housing end member of FIG. **43** showing the cartridge being removed;

FIG. **47** is a schematic view of a LED light source including one cartridge in one housing end member, in accordance with an embodiment;

FIG. **48** is a schematic view of a LED light source including one cartridge in each of two housing end members, in accordance with an embodiment;

FIG. **49** is a schematic view of a LED light source including two cartridges in one housing end member, in accordance with an embodiment;

FIG. **50** is a schematic view of a LED light source including four cartridges in three housing end members, in accordance with an embodiment;

FIG. **51** is a schematic view of a LED light source including four cartridges in four housing end members, in accordance with an embodiment;

FIG. **52** is a schematic view of a LED light source including four cartridges in two housing end members, in accordance with an embodiment;

FIG. **53** is a schematic view of a LED light source including eight cartridges in two housing end members, in accordance with an embodiment;

FIG. **54** is a schematic view of a LED light source including four cartridges in two housing end members, each housing end member including a heat sink, in accordance with an embodiment;

FIG. **55** is a perspective view of a LED light source formed as a lightbulb in accordance with an embodiment;

FIG. **56** is an exploded view of the LED light source of FIG. **55**;

FIG. **57** is a cross-sectional view taken along line **57-57** in FIG. **55** showing an open condition and a cartridge removed;

FIG. **58** is a cross-sectional view taken along line **57-57** in FIG. **55** showing a closed condition;

FIG. **59** is a cross-sectional view taken along line **57-57** in FIG. **55** showing the open condition;

FIG. **60** is a perspective view of a LED light source formed as a light bulb in accordance with another embodiment;

FIG. **61** is a perspective view of the LED light source of FIG. **60** with a cartridge removed;

FIG. **62** is a cross-sectional view taken along line **62-62** in FIG. **60**;

FIG. **63** is a perspective view of a LED light source formed as a light bulb in accordance with another embodiment;

FIG. **64** is a perspective view of the LED light source of FIG. **63** with a cartridge removed;

FIG. **65** is a cross-sectional view taken along line **65-65** in FIG. **63**;

FIG. **66** is a perspective view of a LED light source formed as a light bulb in accordance with another embodiment;

FIG. **67** is a perspective view of the LED light source of FIG. **66** with a cartridge removed;

FIG. **68** is a cross-sectional view taken along line **68-68** in FIG. **66**;

FIG. **69** is a perspective view of a LED light source formed as a light bulb in accordance with another embodiment;

FIG. **70** is a perspective view of the LED light source of FIG. **69** with a cartridge removed;

FIG. **71** is a cross-sectional view taken along line **71-71** in FIG. **69**;

FIG. **72** is a perspective view of a LED light source formed as a light bulb in accordance with another embodiment;

FIG. **73** is a perspective view of the LED light source of FIG. **72** with a diffuser removed;

FIG. **74** is a cross-sectional view taken along line **74-74** in FIG. **72**;

FIG. **75** is a perspective view of a LED light source formed as a light bulb in accordance with another embodiment;

FIG. **76** is a perspective view of the LED light source of FIG. **75** with a diffuser removed;

FIG. **77** is a cross-sectional view taken along line **77-77** in FIG. **75**;

FIG. **78** is a perspective view of a LED light source formed as a light bulb in accordance with another embodiment;

FIG. **79** is a perspective view of the LED light source of FIG. **78** with a cartridge removed;

FIG. **80** is a cross-sectional view taken along line **80-80** in FIG. **78**;

FIG. **81** is a perspective view of a LED light source formed as a light bulb in accordance with another embodiment;

FIG. **82** is a perspective view of the LED light source of FIG. **81** with a cartridge removed;

FIG. **83** is a cross-sectional view taken along line **83-83** in FIG. **81**;

FIG. **84** is a perspective view of a LED light source formed as a light bulb in accordance with another embodiment;

FIG. **85** is a perspective view of the LED light source of FIG. **84** with a cartridge removed;

FIG. **86** is a cross-sectional view taken along line **86-86** in FIG. **84**;

FIG. **87** is a perspective view of a LED light source formed as a light bulb in accordance with another embodiment;

FIG. **88** is a perspective view of the LED light source of FIG. **87** with two cartridges removed;

FIG. **89** is a cross-sectional view taken along line **89-89** in FIG. **87**;

FIG. **90** is a perspective view of a LED light source in accordance with an embodiment;

FIG. **91** is a perspective view of the LED light source of FIG. **90** with a cartridge removed;

FIG. **92** is a cross-sectional view taken along line **92-92** in FIG. **90**;

FIG. **93** is a cross-sectional view taken along line **93-93** in FIG. **90**;

FIG. **94** is a perspective view of a LED light source in accordance with an embodiment;

FIG. **95** is a perspective view of the LED light source of FIG. **94** with three cartridges removed;

FIG. **96** is a cross-sectional view taken along line **96-96** in FIG. **94**;

FIG. **97** is a cross-sectional view taken along line **97-97** in FIG. **94**;

FIG. **98** is a perspective view of a LED light source in accordance with an embodiment;

FIG. **99** is a perspective view of the LED light source of FIG. **98** with three cartridges removed;

FIG. **100** is a cross-sectional view taken along line A-A in FIG. **98**;

FIG. **101** is a perspective view of a LED light source including a mounting member, in accordance with an embodiment;

FIG. **102** is a cross-sectional view taken along line B-B in FIG. **101**;

FIG. **103** is an exploded view of the cross-section of FIG. **102**;

FIG. **104** is a perspective view of a LED light source including a mounting member in accordance with another embodiment;

FIG. **105** is a perspective view of a LED light source including a mounting member in accordance with another embodiment;

FIG. **106** is a cross-sectional view taken along line C-C in FIG. **101** in accordance with an embodiment;

FIG. **107** is a cross-sectional view of a LED light source including a mounting member in accordance with another embodiment;

FIG. **108** is an exploded view of the cross-section of FIG. **107**;

FIG. **109** is a perspective view of a frame in accordance with an embodiment;

FIG. **110** is a rear perspective view of the frame of FIG. **109** with a backing removed;

FIG. **111** is an exploded view of the frame of FIG. **109**;

FIG. **112** is a cross-sectional view taken along line D-D in FIG. **109**, in accordance with an embodiment;

FIG. **113**A is a partial cross-sectional view taken along line D-D in FIG. **109**, in accordance with an embodiment;

FIG. **113**B is a partial cross-sectional view taken along line D-D in FIG. **109** in accordance with another embodiment;

FIG. **114** is a schematic view of a frame in accordance with an embodiment;

FIG. **115** is an enlarged portion of one of the corners of the schematic of FIG. **114**;

FIGS. **116-132** are partial cross-sectional and cross-sectional perspective views taken along line E-E in FIG. **109**, in accordance with various embodiments;

FIG. **133** is an exploded view of the frame of FIG. **109** in accordance with another embodiment;

FIG. **134** is a cross-sectional view taken along line E-E in FIG. **109** in accordance with an embodiment;

FIG. **135** is a partial cross-sectional view taken along line E-E in FIG. **109**, in accordance with an embodiment;

FIG. **136** is a partial cross-sectional view taken along line E-E in FIG. **109**, in accordance with an embodiment;

FIGS. **137-139** are schematic views of a frame in accordance with various embodiments;

FIG. **140** is an exploded view of the frame of FIG. **139**;

FIG. **141** is a cross-sectional view of a LED light source in accordance with an embodiment;

FIG. **142** is a cross-sectional view of a LED light source in accordance with another embodiment;

FIG. **143** is an exploded view of a LED light source in accordance with another embodiment;

FIG. **144** is an exploded view of a LED light source in accordance with another embodiment;

FIG. **145** is a side view of a LED light source in accordance with another embodiment;

FIG. **146** is a side view of a LED light source in accordance with another embodiment;

FIG. **147** is an exploded view of a frame in accordance with another embodiment;

FIG. **148** is a partial cross-sectional view of the frame of FIG. **147**;

FIG. **149** is another partial cross-sectional view of the frame of FIG. **147**;

FIG. **150** is a partial cross-sectional view of a frame showing a cartridge in an inserted position, in accordance with another embodiment;

FIG. **151** is the partial cross-section of FIG. **150** showing the cartridge being removed;

FIG. **152** is a schematic illustration of a circuit of an LED light source in accordance with an embodiment;

FIG. **153**A is a schematic illustration of another circuit of an LED light source, showing energy storage members connected in parallel;

FIG. **153**B is the schematic illustration of FIG. **153** showing the energy storage members connected in series;

FIG. **154** is a perspective view of a frame in accordance with another embodiment;

FIG. **155** is a schematic view of a circuit of a LED light source in accordance with another embodiment;

FIG. **156** is a perspective cross-sectional view of a shelving unit in accordance with an embodiment;

FIG. **157** is a cross-sectional view of a shelving unit in accordance with another embodiment;

FIG. **158** is a cross-sectional view of a shelving unit in accordance with another embodiment;

FIG. **159** is a perspective cross-sectional view of a shelving unit showing a door in a closed position in accordance with an embodiment;

FIG. **160** is the perspective cross-section of FIG. **159** showing the door in an open position;

FIG. **161** is a perspective cross-sectional view of a shelving unit showing a door in a closed position in accordance with an embodiment;

FIG. **162** is the perspective cross-section of FIG. **161** showing the door in an open position;

FIG. **163** is a perspective cross-sectional view of a shelving unit showing a door in an open position and a shelf installed;

FIG. **164** is the perspective cross-section of FIG. **163** showing the shelf removed;

FIG. **165** is a perspective cross-sectional view of a shelving unit in accordance with another embodiment;

FIG. **166** is a perspective cross-sectional view of the shelving unit of FIG. **165** showing a door in a closed position;

FIG. **167** is a perspective cross-sectional view of the shelving unit of FIG. **165** showing the door in an open position;

FIG. **168** is a perspective view of a shelving unit in accordance with an embodiment;

FIG. **169** is a perspective cross-sectional view taken along line F-F in FIG. **168**;

FIG. **170** is a perspective view of a shelving unit in accordance with another embodiment;

FIG. **171** is a perspective cross-sectional view taken along line G-G in FIG. **170**;

FIG. **172** is a perspective view of a shelving unit in accordance with another embodiment;

FIG. **173** is a perspective view of a drawer in accordance with an embodiment;

FIG. **174** is a perspective view of a shelving unit in accordance with another embodiment;

FIG. **175** is a cross-sectional view taken along line H-H in FIG. **174**;

FIGS. **176-177** are cross-sectional and perspective cross-sectional views of a LED light source in accordance with an embodiment;

FIG. **178** is a perspective view of a walkway in accordance with an embodiment;

FIG. **179** is a perspective view of a floor tile in accordance with an embodiment;

FIG. **180** is a front elevation view of a garage door in accordance with an embodiment;

FIG. **181** is a perspective view of a window in accordance with an embodiment;

FIG. **182** is a partial cross-sectional view taken along line J-J in FIG. **181**;

FIG. **183** is a perspective view of a doorway in accordance with an embodiment;

FIG. **184** is a cross-sectional view taken along line K-K in FIG. **183**;

FIG. **185** is a perspective view of a staircase in accordance with an embodiment;

FIG. **186** is a partial cross-sectional view taken along line L-L in FIG. **185**;

FIG. **187** is a perspective cross-sectional view of a closet in accordance with an embodiment;

FIG. **188** is a partial cross-sectional view of a closet in accordance with another embodiment;

FIG. **189** is a perspective view of a floor mat in accordance with an embodiment;

FIG. **190** is a side elevation view of the floor mat of FIG. **189** in a flat configuration;

FIG. **191** is a side elevation view of the floor mat of FIG. **189** in a partially rolled configuration;

FIG. **192** is a cross-sectional view of a food container supported on a supporting member, in accordance with an embodiment;

FIG. **193** is a perspective view of an art display in accordance with an embodiment;

FIG. **194** is a cross-sectional view taken along line M-M in FIG. **193**;

FIG. **195** is a perspective view of furniture in accordance with an embodiment;

FIG. **196** is a perspective cross-sectional view taken along line N-N in FIG. **195**, in accordance with an embodiment;

FIG. **197** is a perspective cross-sectional view taken along line N-N in FIG. **195**, in accordance with another embodiment;

FIG. **198** is a perspective view of furniture in accordance with another embodiment;

FIG. **199** is a perspective cross-sectional view taken along line P-P in accordance with an embodiment;

FIG. **200** is a perspective view of a bicycle equipped with an LED light source in accordance with an embodiment;

FIG. **201** is a partial cross-sectional view taken along like Q-Q in FIG. **200**;

FIG. **202** is a perspective view of a bicycle equipped with an LED light source in accordance with another embodiment;

FIG. **203** is a partial cross-sectional view taken along line R-R in FIG. **202**;

FIG. **204** is a side elevation view of a user wearing a helmet having an LED light source in accordance with an embodiment; and,

FIG. **205** is a partial side elevation view of the user wearing the helmet of FIG. **204**, showing a cross-section of the LED light source.

## DESCRIPTION OF VARIOUS EMBODIMENTS

Numerous embodiments are described in this application, and are presented for illustrative purposes only. The described embodiments are not intended to be limiting in any sense. The invention is widely applicable to numerous embodiments, as is readily apparent from the disclosure herein. Those skilled in the art will recognize that the present invention may be practiced with modification and alteration without departing from the teachings disclosed herein. Although particular features of the present invention may be described with reference to one or more particular embodiments or figures, it should be understood that such features are not limited to usage in the one or more particular embodiments or figures with reference to which they are described.

The terms "an embodiment," "embodiment," "embodiments," "the embodiment," "the embodiments," "one or more embodiments," "some embodiments," and "one embodiment" mean "one or more (but not all) embodiments of the present invention(s)," unless expressly specified otherwise.

The terms "including," "comprising" and variations thereof mean "including but not limited to," unless expressly specified otherwise. A listing of items does not imply that any or all of the items are mutually exclusive, unless expressly specified otherwise. The terms "a," "an" and "the" mean "one or more," unless expressly specified otherwise.

As used herein and in the claims, two or more parts are said to be "coupled", "connected", "attached", "joined" or "fastened" where the parts are joined or operate together either directly or indirectly (i.e., through one or more intermediate parts), so long as a link occurs. As used herein and in the claims, two or more parts are said to be "directly coupled", "directly connected", "directly attached", "directly joined", or "directly fastened" where the parts are connected in physical contact with each other. As used herein, two or more parts are said to be "rigidly coupled", "rigidly connected", "rigidly attached", "rigidly joined", or "rigidly fastened" where the parts are coupled so as to move as one while maintaining a constant orientation relative to each other. None of the terms "coupled", "connected", "attached", "joined", and "fastened" distinguish the manner in which two or more parts are joined together.

General Description of a LED Light Source

The following is a general description of a LED light source that may use any of the features disclosed herein and may be of various configurations as disclosed herein.

FIGS. **1** and **2** exemplify a LED light source **100** which includes a housing **104**, a light guide **108** having a light emitting face **112**, and a cartridge **116** having one or more LEDs. As exemplified herein. housing **104** may be of various designs which position cartridge **116** so as to emit light into an end face **144** of light guide **108**. Light guide **108** may be any light guide known in the art. The light reflects internally as it travels longitudinally within light guide **108** and re-emits from light emitting locations **114** on light guide light emitting face **112** towards a subject to be illuminated, such as artwork, advertising media, furniture, or an area of an indoor or outdoor space.

Light emitting locations **114** may be formed in any manner suitable for causing at least a portion of light that internally strikes the light emitting locations **114** to emit from light guide light emitting face **112**, or that causes light emission in response to light internally striking the light emitting locations **114**. In some examples, light emitting locations **114** may be spaced apart discontinuities (e.g. bumps or divots) or light scattering material that interrupt the internal reflection of light within light guide **108**, or photoluminescent spots (e.g. fluorescent or phosphorescent spots) that absorb internally incident light and then emit light outwardly.

Unidirectional Light Source

In accordance with one aspect of this disclosure, which may be used with one or more other aspects disclosed herein, a LED light source **100** is provided wherein light is inhibited from being emitted in one or more directions. Accordingly, in some embodiments, LED light source **100** may preferentially emit light in particular directions. For example, LED light source **100** may preferentially emit light

in light emitting directions **120**, and emit substantially no light in non-light emitting directions **124**. An advantage of this design is that it allows the light emitted by the LED light source **100** to be concentrated towards a subject to be illuminated.

In one embodiment, light may not be emitted from a rear surface. Accordingly, as exemplified, light guide **108** may have a rear face **128** opposed to light emitting face **112**, and an opaque member, which may have a reflective surface, such as reflector **132**, may overlie rear face **128**. Reflector **132** may reflect light emitted from light guide rear face **128**. For example, an LED light source **100** may be suspended from a ceiling to illuminate a room, and have a reflector **132** that prevents the LED light source **100** from illuminating the ceiling. Reflector **132** may also improve the power efficiency of LED light source **100** by intensifying the light directed in light emitting directions **120**.

Reflector **132** has a reflective surface **134** that faces light guide rear face **128** to reflect light escaping light guide rear face **128**. Reflective surface **134** can be made of any reflective material. In some embodiments, reflective surface **134** includes a white coating. An advantage of this design is that it allows reflector **132** to provide a neutral reflection with little or no effect on the color of the reflected light. In some embodiments, reflective surface **134** is coated with a highly reflective coating (e.g. greater than 90% reflectivity), such as titanium oxide. This can reduce light attenuation at the point of reflection to improve the efficiency of the LED light source **100**. As shown in FIG. **4**, reflector **132** may be positioned with reflective surface **134** abutting light guide rear face **128**. This can allow reflector **132** to reflect all light emitting from light guide rear face **128**. In some embodiments, reflective surface **134** is in physical contact with light guide rear face **128**.

Returning to FIG. **4**, reflector **132** may be a component of housing **104**. For example, reflector **132** may provide a rear wall of housing **104**. Alternatively, reflector **132** may be a discrete component (separate from housing **104**) that is positioned behind light guide rear face **128**. In some embodiments, reflector **132** is a reflective coating (e.g. paint) applied to light guide rear face **128**.

In some embodiments, LED light source **100** does not include reflector **132**. An advantage of this design is that it allows LED light source **100** to emit light in more directions, which can be desirable in some cases such as to simultaneously illuminate a room below and ceiling art above. For example, light guide **108** may include light emitting locations **114** on both of faces **112** and **128** so that light is emitted from both of faces **112** and **128**.

Diffuser

In accordance with another aspect of this disclosure, which may be used with one or more other aspects disclosed herein, a LED light source **100** may be provided with a diffuser to soften the point effect of light emitted from light emitting face **112**. While the use of light emitting locations **114** on light emitting face **112** may reduce the point effect of light provided by a LED (as compared with the LED facing directly towards the area to be illuminated) a diffuser may provide a more even distribution of light.

Accordingly, as exemplified in FIG. **2**, LED light source **100** may include a light transmitting surface **136** (also referred to herein as a diffuser) that overlays light guide **108** to further diffuse and soften the light emitted by LED light source **100**. Diffuser **136** is at least translucent (i.e. at least semi-transparent). In other words, diffuser **136** is not completely opaque. In the illustrated example, at least a portion of diffuser **136** is formed as a cover that is spaced apart from light guide **108**. This can allow the diffuser **136** to be relatively larger in area than light guide light emitting face **112**, which can thereby enhance the light diffusion capability of diffuser **136**. In the illustrated example, diffuser **136** is shown having a central panel **138** which is spaced apart from light guide light emitting face **112**, and which extends longitudinally between first and second diffuser ends **142** and **146**. Diffuser central panel **138** may be spaced apart from light guide light emitting face **112** by any distance sufficient to allow the light from light guide light emitting face **112** to disperse over central panel **138**. For example, referring to FIG. **4**, diffuser central panel **138** may be spaced apart from light guide light emitting face **112** by a distance **150** of between about 0.25 to 3 inches.

Returning to FIG. **2**, in some embodiments, diffuser **136** may be non-planar (e.g. curved or angular) which can further enhance the light diffusion capability of diffuser **136** with additional surface area and light emitting directions **120**. In the illustrated embodiment, diffuser **136** includes first and second sides **154** and **158** including first and second diffuser side panels **162** and **170**, each of which extends between the first and second diffuser ends **142** and **146**. As shown, first and second diffuser sides **154** and **158** are oriented at a (non-zero) angle to diffuser central panel **138**. Together, diffuser central panel **138** and diffuser sides **154** and **158** may form a concave inner diffuser surface **174** that extends over the light guide light emitting face **112** and over longitudinally extending light guide sides **178** and **182**. An advantage of this design is that it can allow diffuser **136** to capture and diffuse light emitted by light guide **108** through face **112** and light that may escape through light guide sides **178** and **182**.

Diffuser **136** can be made of any material suitable for diffusing light emitted by light guide **108**. For example, diffuser **136** may be made of at least one of acrylic, polypropylene, and polycarbonate. In some embodiments, the diffuser **136** may be white in color. This can reduce or eliminate the effect the diffuser **136** has on the color of the diffused light. In other embodiments, diffuser **136** may be intentionally non-white to provide a desired color effect.

In alternative embodiments, LED light source **100** may not include a diffuser **136** or other member that overlays light guide light emitting face **112**. An advantage of this design is that it allows unfiltered light to be focused on an object to be illuminated. A further advantage of this design is that it mitigates the light attenuation associated with diffuser **136**, and therefore improves the lighting efficiency of the LED light source **100**.

Light Source with a Removable LED Cartridge

In accordance with another aspect of this disclosure, which may be used with one or more other aspects disclosed herein, a LED light source is provided wherein the LEDs are removable so that they may be replaced when, e.g., one or more of the LEDs fails. For example, as exemplified herein, the LED light source may removable receive a cartridge **116** which comprises one or more LEDs.

As exemplified in FIG. **3**, cartridge **116** may be removably receivable in housing **104**. An advantage of this design is that it allows cartridge **116** to be removed, for repair or disposal, and replaced. This contrasts with traditional light fixtures in which a disposable light tube is removably connected to a ceiling ballast. The light tube includes not only an LED or fluorescent lighting module but also a diffusing covering, and other components. LED light source **100** provides a reusable light guide **108** (FIG. **2**) and optional diffuser **136** which need not be disposed with cartridge **116**. As a result, cartridge **116** is smaller, lighter,

less expensive, and more environmentally friendly than the disposable light tubes of traditional light fixtures. Cartridge **116** also provides greater flexibility to the shape and physical configuration of LED light source **100** because LED light source **100** need not be designed around accommodating a long cylindrical light tube.

Cartridge **116** can be removably receivable in housing **104** in any manner that allows cartridge **116** to be powered and positioned to emit light into light guide **108** (FIG. **2**). In the illustrated embodiment, housing **104** includes a recess **140** provided on an outer surface of the light source into which cartridge **116** is slideably receivable. This allows cartridge **116** to be conveniently inserted and removed from LED light source **100**, without the need to disassemble the light source which can be particularly significant where LED light source **100** is positioned in difficult-to-reach (e.g. high-up) areas or where there are many (e.g. dozens to thousands) of LED light sources **100** to maintain in a facility (e.g. an office building).

Returning to FIG. **2**, light guide **108** extends longitudinally from a first end face **144** to a second end face **148**. Light guide **108** has a longitudinal length **152**, a transverse width **156**, and a thickness **160**. As shown in FIGS. **4** and **5**, cartridge **116** may include a plurality of LEDs **164** which are positioned and oriented on a first cartridge face **166** that extends transversely to light guide **108** to emit light into light guide first face **144** when cartridge **116** is received in housing **104**. The light travels along longitudinal length **152** of light guide **108** and is re-emitted from light guide light emitting face **112** at light guide light emitting locations. An advantage of this design is that cartridge **116** may be sized according to light guide transverse width **156** instead of light guide longitudinal length **152**. This allows cartridge **116** to be smaller, lighter, and less expensive as compared with traditional disposable light tubes that are sized to extend substantially the longitudinal length of the light fixture.

As exemplified in FIGS. **4** and **5**, cartridge **116** may be slideably receivable in housing recess **140**. As shown, housing recess **140** may extend from an insertion end **168** transversely of light guide **108** to an inner end **172**, and from a first side **176** longitudinally away from light guide **108** to an opposed face **180**. Housing recess insertion end **168** may define an insertion opening **184** sized to receive cartridge **116**. In use, cartridge **116** may be moved transversely relative to the longitudinal length **152** of the light guide **108** from an insertion position (FIG. **6**) to an inserted position (FIG. **5**) and vice versa. As shown in FIG. **4**, in the inserted position, light guide first end face **144** and cartridge first face **166** abut housing recess first side **176** and face each other so that LEDs **164** are oriented and positioned to emit light into light guide **108**. As shown in FIG. **6**, in the insertion position, cartridge first face **166** is at least partially spaced apart from housing recess first side **176**. From the insertion position (FIG. **6**), cartridge **116** can be moved longitudinally towards light guide **108** to the inserted position (FIG. **5**), or withdrawn from the housing **104** transversely through the housing insertion opening **184** as seen in FIG. **7**. It will be appreciated that, in the inserted position, the LEDs or the face of cartridge **116** facing the light guide may contact the face of the light guide. Alternately, they may be spaced apart.

Returning to FIGS. **4** and **5**, housing **104** may be configured to retain cartridge **116** in the inserted position, whereby LEDs **164** are positioned in close proximity to light guide first end face **144** for efficient transmission of light from LEDs **164** into light guide **108**. In some embodiments, when cartridge **116** is in the insertion position (FIG. **6**), housing **104** may bias cartridge **116** to move to the inserted position (FIG. **5**). For example, housing **104** may include a biasing member **188** that urges cartridge **116** to move from the insertion position to the inserted position. An advantage of this design is that it allows the housing recess **140** to provide greater clearance for easy insertion of the cartridge **116** into housing recess **140**. For example, housing recess opening **184** may have a longitudinal width **192** that is substantially wider than the corresponding dimension **196** of cartridge **116**, and biasing member **188** may be relied upon to move cartridge **116** toward housing recess first side **176**, away from housing recess opposed face **180**, to close the gap between LEDs **164** and light guide first end face **144**.

Referring to FIGS. **4** and **7**, in some embodiments, housing recess **140** may narrow in longitudinal width between housing recess insertion opening **184** and housing recess inner end **172**. An advantage of this design is that allows for a wide housing recess insertion opening **184** for easy insertion of cartridge **116**, and also guides cartridge **116** to move toward the inserted position as the cartridge **116** is moved inwardly. In the illustrated example, the narrowing width of housing recess **140** is effected by a cam **204** that defines a portion of housing recess opposed face **180** and that rises towards housing recess first side **176** between housing recess insertion opening **184** and housing recess inner end **172**. It will be appreciated that cartridge **116** may be moved manually into the inserted position shown in FIG. **5** or alternately a drive member, as discussed hereinafter, may be used.

As exemplified in FIGS. **5** and **6**, cartridge **116** may be prevented from being withdrawn from housing recess **140** when in the inserted position. Instead, it may be required to move cartridge **116** to the insertion position to release cartridge **116** from housing recess **140**. An advantage of this design is that cartridge **116** is prevented from accidental withdrawal. Biasing member **188** may retain cartridge **116** in the inserted position, whereby withdrawal of cartridge **116** is prevented, until a deliberate action (e.g. manual user action) is taken to move cartridge **116** to the insertion position. In the insertion position, cartridge **116** can be freely withdrawn.

Cartridge **116** may be prevented from withdrawal when in the inserted position, in any manner. For example, each of housing **104** and cartridge **116** may include a locking member **208**, **212**. Locking members **208** and **212** can be any components which interact when cartridge **116** is in the inserted position to inhibit withdrawal of cartridge **116** from housing recess **140**. As exemplified, locking members **208** and **212** may include faces that abut in the inserted position to obstruct withdrawal of cartridge **116** from housing recess **140**. In the illustrated example, housing locking member **208** is formed as a protrusion including an inner end face **216**, cartridge locking member **212** is formed as a slot including an inner end face **218**, and end faces **216** and **218** abut when housing locking member **208** is received in cartridge locking member **208** in the inserted position (FIG. **5**) to prevent withdrawal of cartridge **116** from housing recess **140**.

Referring to FIGS. **5** and **6**, biasing member **188** can take any form that urges cartridge **116** from the insertion position to the inserted position. In the illustrated embodiment, biasing member **188** is an electrical contact that supplies electricity from a power source (e.g. an electrical wire **214** connected to an energy storage member or an electrical wall plug) to cartridge **116** for powering LEDs **164**. An advantage of this design is that the biasing member **188** performs double duty as a biasing member and electrical conductor thereby avoiding the complexity, weight, and expense of having a separate component act as a biasing member.

Still referring to FIGS. **5** and **6**, biasing member **188** can apply a biasing force to any portion of cartridge **116** that is suitable for urging cartridge **116** to the inserted position (FIG. **5**). In the illustrated embodiment, biasing member **188** is positioned in housing recess **140** proximate housing recess inner end **172** to apply a biasing force to an inner end portion **216** of cartridge **116**. An advantage of this design is that biasing member **188** does not act upon cartridge **116** until cartridge **116** is moved into the insertion position within housing recess **140**. This allows LEDs **164** to align with light guide first end face **144** (FIG. **4**) before biasing member **188** urges cartridge **116** into the inserted position, for example.

In the illustrated example, cartridge **116** is substantially rigid. For example, cartridge **116** may include a rigid substrate **220** (e.g. a printed circuit board) that defines cartridge first face **166**, on which LEDs **164** are arranged. As shown, biasing member **188** may urge cartridge first face **166** to lay flat against housing recess first side **176**. As a result, cartridge **116** is urged to rotate about cartridge inner end portion **216** towards housing recess first side **176** (and light guide first end face **144**, FIG. **4**). Thus, the rigidity of cartridge **116** may cooperate with biasing member **188** to move cartridge **116** into the inserted position (FIG. **5**) by application of the biasing force to cartridge inner end portion **216**. Referring to FIG. **6**, it can be seen that housing recess cam **204** helps to guide cartridge inner end portion **216** into engagement with biasing member **188**. This helps to prevent misalignment of cartridge **116** when it is inserted into housing recess **140**.

Referring to FIGS. **3** and **4**, LED light source **100** can include any housing **104** suitable for holding light guide **108** and cartridge **116**, and optionally hold one or both of a reflector **132** and a diffuser **136**. For example, housing **104** may hold these components in relative positions that allow for efficient transmission and distribution of light from cartridge LEDs **164** to light emitting directions **120**. In the illustrated example, housing **104** includes first and second end members **224** (FIG. **1**). Each housing end member **224** may include a light guide retention slot **228** sized to receive an end portion **232** of light guide **108**. In the illustrated example, retention slot **228** is sized to receive light guide end portion **232** and a reflector end portion **236**. An advantage of this design is that it allows housing **104** to hold reflector **132** against light guide **108** for efficient light reflection. In the illustrated example, housing end member **224** includes a transversely extending sidewall **240** and a transversely extending inner wall **250**, which are spaced apart to define retention slot **228**.

Referring to FIG. **2**, LED light source **100** can include any number of cartridges **116**. For example, LED light source **100** may include a cartridge **116** removably receivable in each of the housing end members **224**. An advantage of this design is that it allows cartridges **116** to emit light into both light guide end faces **144** and **148**, which may help to more evenly distribute light emitted from light guide light emitting face **112**, and reduce the average number of internal reflections in light guide **108** for greater light transmission efficiency. In other embodiments, LED light source **100** includes just one cartridge **116** that is removably receivable in just one of housing end members **224**. An advantage of this design is that LED light source **100** has only one cartridge **116** to replace which can reduce replacement time and maintenance costs considerably in environments that have hundreds or thousands of LED light sources **100** installed (e.g. office buildings).

Turning to FIG. **3**, housing end member **224** may include an end wall **248** that defines housing recess opposed face **180**. As shown, housing end wall **248** may be connected to housing sidewall **240** in opposition to retention slot **228**. Housing end wall **248** may include housing recess cam **204** and biasing member **188**. Housing end wall **248** may be integrally formed with housing sidewall **240**, or discretely formed as shown and then permanently or removably connected to housing sidewall **240**. In the illustrated example, housing end wall **248** is connected to housing sidewall **240** with fasteners **252** (e.g., screws).

In several of the examples, the housing recess **140** is illustrated as having a housing insertion opening **184** on a lateral side of housing sidewall **240**, which allows cartridge **116** to be inserted and removed in a transverse direction parallel to light guide light emitting face **112**. However, it will be appreciated that housing insertion opening **184** may be positioned elsewhere on housing sidewall **240** and that cartridge **116** may be insertable in different directions. The position of housing insertion opening **184** and cartridge insertion direction may be selected based on, for example the orientation of the LED light source **100** when installed. For example, in some applications it may be preferable to position housing insertion opening **184** for easiest user accessibility (for removing or inserting cartridge **116**) or alternatively to conceal cartridge **116** (for aesthetics or to avoid tampering).

As exemplified in FIGS. **42-46**, insertion opening **184** may be positioned on an upper side **368** of housing sidewall **240**. As shown, cartridge **116** is moveable from an inserted position (FIG. **44**) to an insertion position (FIG. **45**), and then withdrawable through housing insertion opening **184** in a direction normal to light guide light emitting face **112**.

Heat Sink

In accordance with another aspect of this disclosure, which may be used with one or more other aspects disclosed herein, a heat sink may be provided to assist in withdrawing head produced by the LEDs. As exemplified in FIG. **7**, the LED light source may include a heat sink **256** thermally connected to cartridge substrate **220**. The heat sink may be part of the cartridge **116** (see for example the embodiment of FIG. **7**) or, alternately, it may be thermally connected to the cartridge **116** when the cartridge **116** is in the inserted position (e.g., it may abut the cartridge **116** when cartridge **116** is in the inserted position). Heat sink **256** can have any design suitable for dissipating heat generated by cartridge **116**, and in particular LEDs **164**. In the illustrated example, heat sink **256** is thermally connected to cartridge second face **260**, which is opposed to cartridge first face **166**. As shown, heat sink **256** may have a plurality of fins extending away from cartridge substrate **220** to increase convective surface area for efficient heat dissipation.

In the illustrated embodiment, cartridge **116** includes heat sink **256**, such that heat sink **256** is removable from housing **104** with cartridge **116**, and optionally disposable with cartridge **116**. For example, heat sink **256** may be integrally formed with cartridge **116**, or discretely formed and permanently or removably attached to cartridge **116**. An advantage of including heat sink **256** in cartridge **116** is that it may promote better thermal contact between heat sink **256** and substrate **220** which can lead to better thermal conduction. This thermal contact may be improved by interposing thermal compound (e.g. high thermal conductivity paste or gel) between heat sink **256** and substrate **220**. By allowing heat sink **256** to be disposable with cartridge **116**, the user may avoid having to ensure proper thermal contact or reapply thermal compound between heat sink **256** and substrate **220**.

Referring to FIG. **8**, heat sink **256** may be a separate component from cartridge **116** in some embodiments. For example, heat sink **256** may be a component of housing **104**.

Cartridge **116** may be free of heat sinks. An advantage of this design is that heat sink **256** may be a reusable non-disposable component that is retained with housing **104** as cartridge **116** is removed and replaced. This further reduces number of components in disposable cartridge **116**, which can make cartridge **116** less expensive, smaller, and lighter (and consequently less expensive to ship and easier to store). Turning to FIGS. **9-11**, cartridge **116** makes thermal contact with heat sink **256** in the inserted position (FIG. **9**), and is thermally disconnected and physically separated from heat sink **256** when removed from housing **104** (FIG. **11**).

Referring to FIGS. **9-12**, heat sink **256** may be urged into physical contact with cartridge **116** as cartridge **116** is biased into the inserted position (FIGS. **9** and **12**). An advantage of this design is that the pressure at the interface of cartridge **116** and heat sink **256** can collapse small particles (e.g. dust or dirt), and thereby promote better thermal contact between cartridge **116** and heat sink **256**. As exemplified, cartridge substrate **220** and heat sink **256** have complimentary faces **260** and **264**, which make flush physical contact when cartridge **116** is in the inserted position (FIGS. **9** and **12**). Faces **260** and **264** can have any complimentary surface profiles that promote efficient heat transfer when in flush physical contact. In the illustrated example, cartridge substrate face **260** and heat sink face **264** are flat planar surfaces.

Optionally, one or both of faces **260** and **264** includes thermal compound that accommodate surface defects to enhance the thermal contact. In some embodiments, the thermal compound is pre-applied to cartridge substrate face **260** (e.g. in the retail package). An advantage of this design is that the user is not required to apply the thermal compound, which avoids potential complications associated with misapplication of the thermal compound. In other embodiments, the thermal compound is user applied to heat sink face **264**. An advantage of this design is that the cartridge **116** can be provided free of thermal compound, and therefore at a lower weight and cost. Manufacturing and packaging of cartridge **116** are also simplified. Also, the thermal compound applied to heat sink face **264** may remain effective for use in connection with several cartridges **116** before reapplication is required, such that less thermal compound may used overall.

Heat sink **256** can be permanently connected or integrally formed with housing **104**, or removably connected to housing **104**. In the illustrated embodiment, heat sink **256** is positioned in housing recess **140**. As shown, heat sink **256** may be connected to housing end wall **248** by biasing members **188***b*. Biasing members **188***b* urge heat sink **256** in the longitudinal direction towards cartridge **116** to move cartridge **116** from the insertion position (FIG. **10**) to the inserted position (FIGS. **9** and **12**). To remove cartridge **116**, the user may apply force to cartridge **116** in opposition to biasing members **188** to move cartridge **116** from the inserted position (FIGS. **9** and **12**) to the insertion position (FIG. **10**), and then pull cartridge **116** transversely out of housing recess **140** through housing insertion opening **184** (FIG. **11**).

Housing **104** can include any number of biasing members **188***b*, which can be any type of biasing member suitable for urging heat sink **256** against cartridge **116**. In the illustrated example, housing **104** includes two spaced apart biasing members **188***b*, which as shown may take the form of helical compression springs. This configuration can allow biasing members **188***b* to provide distributed biasing force against heat sink **256** for more even pressure at the interface of heat sink **256** and cartridge **116**. In alternative embodiments, housing **104** may include just one biasing member **188***b*, or more than two biasing members **188***b*. Moreover, biasing member **188***b* may take another form, such as a resiliently deformable pad for example.

Referring to FIG. **8**, in some embodiments, housing end wall **248** may be removably connected or movably connected (e.g. pivotally connected) to housing **104**. An advantage of this design is that it can provide access to heat sink **256** (e.g. for repair or replacement of heat sink **256**, or for application of thermal compound to heat sink **256**). Housing end wall **248** can be removable connected or movably connected to housing **104** in any manner. For example, housing end wall fasteners **252** may be removable to release housing end wall **248** from housing **104**.

Driving Member

In accordance with another aspect of this disclosure, which may be used with one or more other aspects disclosed herein, a driving member may be provided to assist in moving, or to move, the cartridge to the inserted position. As exemplified in FIGS. **13**A and **13**B, driving member **268** may be movably mounted in housing **104**, and operable to drive cartridge **116** from the insertion position to the inserted position. The driving member **268** can drive a heat sink **256** against cartridge **116** as shown, or can drive a cartridge **116** including an integrated heat sink.

Referring to FIGS. **14-16**, driving member **268** may be movable between a first position (FIG. **14**) in which the driving member **268** acts to drive and retain cartridge **116** in the inserted position (FIG. **14**), and a second position (FIGS. **15-16**) in which driving member **268** releases cartridge **116** from the inserted position, whereby cartridge **116** can move to the insertion position (FIG. **15**) and then be withdrawn from housing recess **140** (FIG. **16**).

Referring to FIGS. **13**B and **14**, driving member **268** can have any construction suitable for selectively driving cartridge **116** between the insertion position and the inserted position. In the illustrated embodiment, driving member **268** is formed as a movable shaft having an inner end **272** pivotally mounted to housing **104**. Driving member **268** may also have an outer end **276** which protrudes from housing **104**, and provides a handle for a user to grasp to manually move the driving member **268** between its first and second positions. As shown, a driving cam **280** may be positioned between the driving member **268** and the cartridge **116**. Driving cam **280** may include a cam surface **284** that interacts with driving member **268** as driving member **268** moves to the first position, whereby the driving cam **280** is moved longitudinally to drive cartridge **116** to the inserted position.

Driving member inner end **272** may be pivotally connected to housing **104** in any manner. In the illustrated embodiment, driving member inner end **272** and housing **104** form a ball and socket joint. In other embodiments, driving member inner and **272** and housing **104** may form another type of pivotal connection, such as a hinged joint.

Cam surface **284** can have any configuration that allows driving member **268** to move driving cam **280** towards cartridge **116** as driving cam **280** is moved to the first position (FIG. **14**). In the illustrated embodiment, cam surface **284** is planar and sloped relative to vertical and horizontal, and driving member **268** is vertically movable between the second and first positions. Driving member **268** rides along cam surface **284** as driving member **268** is moved upwardly to the first position, which causes driving cam **280** to slide longitudinally towards cartridge **116**. In other embodiments, cam surface **284** may be non-planar, which may provide a different movement profile.

As shown, heat sink **256** may be connected to housing **104** and positioned between driving cam **280** and cartridge **116**. In this embodiment, moving driving member **268** to the first position (FIG. **14**) drives driving cam **280** and heat sink **256** against cartridge **116**, thereby urging cartridge **116** to move to the inserted position. The pressure that forms at the interface of heat sink **256** and cartridge **116** may help to improve thermal contact between them. In alternative embodiments, cartridge **116** includes heat sink **256**, or LED light source **100** includes no heat sink.

Referring to FIGS. **13A-16**, LED light source **100** may include one or more biasing members **288**, which act against driving member **268** to retract driving cam **280** when driving member **268** is in the second position (FIG. **15**). An advantage of this design is that it allows cartridge **116** to be easily removed (FIG. **16**) once driving member **268** is moved to the second position. Biasing member **288** can have any configuration suitable for urging driving cam **280** away from cartridge **116** when driving member **268** is moved to the second position (FIG. **15**).

In the illustrated example, housing **104** includes two spaced apart biasing members **288**, formed as tensile springs, which are connected to heat sink **256** and housing end wall **248**. As shown, when driving member **268** is moved to the second position (FIG. **15**), biasing members **288** pull heat sink **256**, along with driving cam **280**, longitudinally towards housing end wall **248** away from cartridge **116**. This provides clearance for cartridge **116** to move longitudinally to the insertion position (FIG. **15**), and then removed from housing **104** (FIG. **16**).

Referring to FIGS. **13A** and **16**, housing **104** may include one or more retention members **292** that act to retain driving member **268** in the first or second positions. For example, retention members **292** may retain driving member **268** in position against the force of gravity or biasing members. Retention members **292** can have any configuration suitable for retaining driving member **268** in position. In the illustrated embodiment, driving member outer end **276** extends through a guide slot **296**. The guide slot may guide and constrain the movement of driving cam **280** (FIG. **13B**) to a path between the first position (FIG. **13A**) and the second position (FIG. **16**). As shown, guide slot **296** may include retention members **292** formed as inward protrusions, which narrow a small portion of guide slot **296**. Driving member **268** can be moved along guide slot **296** past the retention members **292** into or out of the first or second position with a bit of force. Consequently, retention members **292** impede driving member **268** from moving out of the first or second positions until a user deliberately applies sufficient force to move driving member **268** past the retention member **292**.

Reference is now made to FIGS. **17-19**. In alternative embodiments driving member **268** may be slideably mounted to housing **104**. Driving member **268** may be slideably mounted to housing **104** in any manner that allows driving member **268** to move between the first and second positions. In the illustrated example, housing **104** includes a track **304**, and driving member inner end **272** is slideably mounted to track **304** for movement between the first position (FIG. **18**) and the second position (FIG. **19**).

Reference is now made to FIGS. **20-22**. In some embodiments, driving member **268** is rotationally mounted to housing **104**. For example, driving member **268** may be rotated (e.g. around an axis **308** of driving member **268**) to drive cartridge to the inserted position. In the illustrated example, driving member inner end **272** is rotatably connected to housing **104**, and driving member **268** is rigidly connected to driving cam **280**, such that they rotate together.

Driving cam **280** can have any shape that can drive cartridge **116** towards the inserted position (FIG. **22**) when driving cam **280** is rotated to a particular rotary position. For example, driving cam **280** may have a cross-sectional shape normal to rotary axis **308** that is either non-circular (e.g. oblong), or non-centered on rotary axis **308**, or both. Consequently, the distance between cam surface **284** and housing recess **140** changes as driving cam **280** is rotated. In the illustrated example, driving cam **280** has an oblong cross-sectional shape centered on rotary axis **308**. As shown in FIGS. **23-26**, driving cam **280** can rotate (by rotating driving member **268**) between a first position (FIG. **23**) in which driving cam **280** drives cartridge into the inserted position, through an intermediate position (FIG. **24**), to a second position (FIG. **25**) in which driving cam **280** releases cartridge **116** from the inserted position. In the second position, cartridge **116** is free to move to the insertion position (FIG. **25**), and then be removed from the housing **104** (FIG. **26**).

Turning to FIG. **22**, driving member outer end **276** may extend through an opening **312** in housing **104** to provide user accessibility to manipulate driving member outer end **276** for rotating driving member **268** about driving member axis **308**. In the illustrated embodiment, housing **104** includes a retention member **292** that acts to resist rotation of driving member **268** from the first position to the second position. As shown, retention member **292** may be a protrusion from housing **104** that makes contact with a protrusion **312** on driving member **268** to resist rotation of driving member **268** to the second position. When in the first position, the user may deliberately apply a force to driving member outer end **276** that overcomes the resistance by retention member **292** to rotate driving member **268** to the second position (and vice versa). Thus, retention member **292** may retain driving member **268** in the first position against, e.g. the force of biasing members **288** (FIG. **21**) or resilient compressibility of cartridge **116**.

Reference is now made to FIGS. **27-29**. In some embodiments, driving member **268** includes a toggle joint **316**. As shown, toggle joint **316** may include first and second pivotally connected arms **320**. Driving member **268** may also include an arm **324** that extends from toggle joint **316**, and that is manually user operable to articulate the toggle joint **316**.

Referring to FIGS. **29-32**, driving member **268** is movable between a first position (FIGS. **29** and **30**) in which driving member **268** drives cartridge **116** to the inserted position, and a second position (FIG. **31**) in which driving member **268** releases cartridge **116** from the inserted position, which allows cartridge **116** to be moved to the insertion position and then withdrawn from housing **104** (FIG. **32**). As shown, moving driving member **268** between the first position (FIGS. **29** and **30**) and the second position (FIG. **31**) includes articulating the toggle joint **316**. Toggle joint arms **320** are pivotally connected to each other end-to-end, and oriented so that a longitudinal length **328** of the toggle joint **316** changes as the toggle joint **316** is articulated (i.e. as the pivotal connection between the toggle joint arms **320** is articulated). The longitudinal length **328** of toggle joint **316** governs the longitudinal separation of cartridge **116** and housing end wall **248**, whereby increasing longitudinal length **328** moves cartridge **116** towards the inserted position.

In the first position (FIGS. **29** and **30**), the toggle joint arms **320** may be parallel or nearly parallel (e.g. within 15 degrees of parallel). The longitudinal length **328** of toggle joint **316** drives the cartridge **116** (and heat sink **256** in the example shown) away from housing end wall **248** into the

inserted position. In the second position (FIG. **31**), the toggle joint arms **320** are substantially folded (i.e. collapsed) into a V-shape, such that the longitudinal length **328** of toggle joint **316** is reduced as compared to the first position. This provides the cartridge **116** (and heat sink **256**) with longitudinal clearance to move to the insertion position.

In some embodiments, moving the driving member **268** between the first and second positions may include inflecting the toggle joint **316**. Toggle joint **316** may have a maximum longitudinal length **328** at an intermediary position between the first and second positions. An advantage of this design is that the inflection operates to retain the toggle joint **316** in the first position (FIG. **30**) until a deliberate force is applied to overcome the inflection and move the toggle joint **316** to the second position (FIG. **31**). The force required to overcome the inflection may be based on a resilient compression or deformation of cartridge **116** or toggle joint arms **320** at the point of inflection, or a biasing member **332** for example.

Still referring to FIGS. **30** and **31**, in the illustrated example, biasing member **332** is connected to toggle joint **316** and acts to resist longitudinal lengthening of toggle joint **316**. In some embodiments, biasing member **332** may also bias toggle joint **316** to the second position (FIG. **31**). Biasing member **332** can be any biasing device, such as a tensile spring or elastic band for example.

Openable End Wall

In accordance with another aspect of this disclosure, which may be used with one or more other aspects disclosed herein, the housing **104** may have an openable end wall to assist in moving the cartridge to the inserted position. As exemplified in FIGS. **33-35**, housing end wall **248** may be movable (e.g. removable or openable) to provide access to housing recess **140** to insert and remove cartridge **116**, and closeable to hold cartridge **116** in the inserted position. In this regard, housing end wall **248** may be considered a driving member in that movement of housing end wall **248** may drive cartridge **116** into the inserted position.

Housing end wall **248** may be connected to housing **104** in any manner that allows housing end wall **248** to be moved (e.g. removed or opened) to provide access to housing recess **140** for inserting and removing cartridge **116**. For example, housing end wall **248** may be translatable (e.g. slidably connected to housing **104**), or rotatable (e.g. pivot ably connected to housing **104**) while remaining connected to housing **104**, or completely removable from housing **104** as shown. In the illustrated example, housing end wall **248** is removably connected to housing **104** by housing end wall fasteners **252**.

Fasteners **252** may be any fastener suitable for removably connecting housing end wall **248** to housing **104**. Further, housing **104** may include any number of fasteners **252**. In the example shown, fasteners **252** include magnets **336**. Each magnet **336** aligns with a magnetically attractable component **338** (e.g. another magnet or a ferromagnetic component) to form a mating magnetic pair, which connects housing end wall **248** to housing **104**. The mating magnetic pairs may include a magnet **336** on housing end wall **248** and a magnetically attractable component **338** on housing **104**, or vice versa. There can be any number of magnetic pairs. In the illustrated example, there are two magnetic pairs. In other embodiments, there may be just one, or greater than two magnet pairs.

In use, the user may disconnect fasteners **252** to move housing end wall **248** to obtain access to cartridge **116** in housing recess **140**. For example, the user may manually (i.e. by hand) apply a removing force to housing end wall **248**, which overcomes the closure force of magnets **336**, to remove housing end wall **248** from housing **104**. Cartridge **116** may then be removed for repair or replacement by a new cartridge.

Optionally, as exemplified, heat sink **256** may be provided with a housing having an openable end wall. In such a case, heat sink **256** may be connected to housing end wall **248**. Heat sink **256** may be permanently connected to housing end wall **248**. Alternatively, heat sink **256** may be removably connected to end wall **248**. This can allow heat sink **256** to be easily cleaned, repaired, or replaced. In other embodiments, heat sink **256** is not connected to housing end wall **248**, and instead removably positioned in housing recess **140** after cartridge **116** is inserted, before housing end wall **248** recloses housing recess **140**. In other embodiments, cartridge **116** includes a heat sink **256**.

Reference is now made to FIGS. **36-38**. In some embodiments, the housing end wall fastener **252** may be a threaded fastener and housing **104** may include a threaded receptacle **340** to receive the threaded fastener **252**. In use, threaded fastener **252** may be aligned with threaded receptacle **340** and rotated (e.g. using a tool or by hand) to drive the threaded fastener **252** into threaded receptacle **340**, thereby joining housing end wall **248** to housing **104**. In the reverse case, threaded fastener **252** may be rotated to withdraw threaded fastener **252** from threaded receptacle **340**, whereby housing end wall **248** can be separated from housing **104**.

Threaded fastener **252** may be configured to remain connected to housing end wall **248** when housing end wall **248** is removed from housing **104**. An advantage of this design is that it avoids having to separately handle and store threaded fastener **252** and housing end wall **248** while, e.g. cartridge **116** is removed and replaced. This can be a real convenience where, for example there are hundreds or thousands of LED light sources **100** to service in a facility. As shown, threaded fastener **252** may be connected to housing end wall **248** in any manner that allows threaded fastener **252** freedom to rotate. In the illustrated example, housing end wall **248** includes a shoulder **344**, which is received in a groove **346** formed in threaded fastener **252** to rotatably connect threaded fastener **252** to housing end wall **248**.

Threaded fastener **252** may be rotatable by hand or using a tool (e.g. screw driver). An advantage of a hand rotatable threaded fastener **252** is that no tool is required. An advantage of a tool rotatable threaded fastener **252** is that it can be smaller and more tamper resistant. In the illustrated example, threaded fastener **252** includes a handgrip **352** which is readily grasped by hand and torqued to rotate threaded fastener **252** to tighten or loose threaded fastener **252**. It will be appreciated that threaded fastener may alternately use a bayonet mount.

Reference is now made to FIGS. **39-41**. In some embodiments, fasteners **252** may be formed as buckles. An advantage of this design is that the buckles **252** may be easily integrally formed (e.g. molded or cast) with housing end wall **248**, which can reduce the number of components and assembly costs. Buckles **252** may take any form that is selectively user operable to connect and disconnect housing end wall **248** and housing **104**. In the illustrated example, each buckle **252** includes a resiliently flexible spring arm **356** including a hook **360** at a free end thereof. Housing sidewall **240** includes a recess **364** (e.g. an aperture) to receive each hook **360**. In use, spring arms **356** are deflected inwardly and moved to align hooks **360** with their corresponding recesses **364**, and then released to spring back outwardly whereby hooks **360** insert into recesses **364**. In

this state, buckles **252** connect housing end wall **248** to housing **104**. To remove housing end wall **248** from housing **104**, spring arms **356** may be again deflected inwardly to remove hooks **360** from their corresponding recesses **364**, thereby freeing housing end wall **248** from connection to housing **104**.

Use of Multiple Cartridges

In accordance with another aspect of this disclosure, which may be used with one or more other aspects disclosed herein, a single light source **100** may include a plurality of cartridges **116**, which may be the same or different. FIG. **47** shows an example including one light guide **108**, which receives light from one cartridge **116** received in one housing recess **140** of one housing end member **224**. However, LED light source **100** can have any number of light guides **108** and any number of cartridges **116** in these and other embodiments. FIGS. **48-54** illustrate exemplary configurations of LED light source **100** having a plurality of light guides **108** and/or a plurality of cartridges **116**.

FIG. **48** exemplifies an embodiment of LED light source **100** including one light guide **108** and two cartridges **116**. As shown, each housing end member **224** may include a housing recess **140**, and a cartridge **116** may be receivable in each housing recess **140** to emit light into the light guide **108**. Each cartridge **116** is shown emitting light into a different one of light guide end faces **144** or **148**. An advantage of this design is that it can allow for more even illumination and/or more control over the illumination of light guide **108**. For example, cartridges **116** may be substantially identical and illuminate both of light guide end faces **144** and **148** with the same light intensity to provide more even illumination of light guide **108** across its longitudinal length **152**. Alternatively, cartridges **116** may be different from each other to provide differential lighting intensity across light guide longitudinal length **152**. In the illustrated example, cartridge $\mathbf{116}_1$ has three LEDs **164**, and cartridge $\mathbf{116}_2$ has two LEDs **164**. All else being equal, this may allow cartridge $\mathbf{116}_1$ to illuminate light guide end face **144** with greater light intensity than the illumination of light guide end face **148** by cartridge $\mathbf{116}_2$. This pattern of side-illumination may provide a desired light emission pattern from light guide **108** for the purpose of illuminating a subject in a desired manner (e.g. for better readability or visibility, or more dramatic effect).

FIG. **49** exemplifies an embodiment of LED light source **100** including two light guides **108** and two cartridges **116**. As shown, housing end member **224** includes a housing recess **140** that holds two cartridges **116**. Alternatively, housing end member **224** may include two separate recesses **140**, each of which holds one cartridge **116**. The light guides **108** are shown extending from opposite longitudinal ends **266** and **270** of housing end member **224**. Cartridge $\mathbf{116}_1$ and $\mathbf{116}_2$ include LEDs **164** oriented to shine in opposite longitudinal directions so that cartridge $\mathbf{116}_1$ emits light into light guide $\mathbf{108}_1$, and cartridge $\mathbf{116}_2$ emits light into light guide $\mathbf{108}_2$. An advantage of this design is that cartridges **116** are centralized, which can simplify cartridges replacement. For example, where LED light source **100** is mounted high on a ceiling, a ladder may not need to be repositioned to access both cartridges **116**. Instead, the central location of cartridges **116** in the same housing end member **224** may allow both cartridges **116** to be accessed (e.g. for repair or replacement) from one ladder position. Also, this design may be more compact and simpler to manufacture and assemble in that fewer housing end members **224** may be required, all else being equal.

FIG. **50** exemplifies an embodiment of LED light source **100** including two light guides **108** and four cartridges **116**. As shown, housing **104** includes an inner end member $\mathbf{224}_1$ between two outer end members $\mathbf{224}_2$ and $\mathbf{224}_3$. The first light guide $\mathbf{108}_1$ is connected to end members $\mathbf{224}_1$ and $\mathbf{224}_2$, and the second light guide $\mathbf{108}_2$ is connected to end members $\mathbf{224}_1$ and $\mathbf{224}_3$. Inner end member $\mathbf{224}_1$ is shown carrying two cartridges **116** which have LEDs **164** oriented to direct light in longitudinally opposite directions into light guide end faces **144** or **148**, substantially as described with respect to FIG. **49**. Outer end members $\mathbf{224}_2$ and $\mathbf{224}_3$ are shown each carrying a cartridge **116** having LEDs **164** oriented to direct light into the light guide end face **144** or **148** of light guides $\mathbf{108}_1$ and $\mathbf{108}_2$ respectively. An advantage of this design is that it provides a central location in end member $\mathbf{224}_1$ for two of the cartridges as discussed above with reference to FIG. **49**, and also provides two sided illumination of light guides **108** for more even illumination and/or more control over the illumination of light guides **108** as discussed above with reference to FIG. **48**. Also as discussed above with reference to FIG. **48**, cartridges **116** may be identical to one another, or one or more (or all) of cartridges **116** may be different. In the illustrated example, cartridges **116** in inner end member $\mathbf{224}_1$ are shown having five LEDs **164** each, and cartridges **116** in outer end members $\mathbf{224}_2$ and $\mathbf{224}_3$ are shown having three LEDs **164** each.

As exemplified in FIGS. **51-52**, housing **104** may include any number light guides **108** connected longitudinally in series by any number of inner end members $\mathbf{224}_1$. An advantage of this design is that this can allow for a compact and substantially continuous arrangement of light guides **108**, such as for ceiling-mounted lighting of a large area room (e.g. office space). There may be one or two outer end members $\mathbf{224}_2$ and $\mathbf{224}_3$ as seen in FIG. **51**, or these outer end members may be omitted as in FIG. **52**. FIGS. **51-52** illustrate embodiments of LED light source **100** including three light guides **108**. However, in alternative embodiments, there may be four or more light guides **108** arranged in series.

FIG. **51** exemplifies an example where each inner end member $\mathbf{224}_1$ holds a cartridge **116** having LEDs **164** that collectively direct light into one of the adjacent light guides **108**. Alternatively or in addition, one or more of inner end members $\mathbf{224}_1$ may contain a plurality of cartridges **116** that together direct light in opposite longitudinal directions to illuminate both adjacent light guides **108** as in FIG. **52**. As exemplified, each inner end member $\mathbf{224}_1$ may include two housing recesses **140** arranged back-to-back to receive cartridges **116** with LEDs **164** oriented to face opposite longitudinal directions.

As exemplified in FIG. **53**, LED light source **100** may include a plurality of cartridges **116** which are arranged to emit light into a single light guide end face **144** or **148**. In other words, LED light source **100** may include a many-to-one relationship of cartridges **116** to illuminated light guide end face **144** or **148**. An advantage of this design is that it allows one cartridge **116** containing a subset of the LEDs **164** which illuminate the end face **144** or **148** to be replaced, instead of replacing a cartridge **116** containing all of the LEDs **164** illuminating that end face **144** or **148**. As a result, the number of working LEDs **164** that are removed when a cartridge **116** is replaced due to one or more failed LEDs **164** may be reduced.

Any number of cartridges **116** may be positioned to illuminate a light guide end face **144** or **148**. In the illustrated embodiment, each housing end member **224** is configured to receive four cartridges **116** that in pairs emit light into the

same light guide end faces **144** or **148**. Cartridges **116** may be positioned transversely side-by-side as shown, and/or stacked in the thickness dimension of light guide **108**.

As exemplified in FIG. **54**, an inner end member $\mathbf{224}_1$ holding a plurality of cartridges **116** may include a heat sink **256** thermally connected to the plurality of cartridges **116** to dissipate heat generated by the plurality of cartridges **116**. As shown, the heat sink **256** may be positioned between the cartridges **116**.

An advantage of this design is that it allows one heat sink **256** to service a plurality of cartridges **116**, which can reduce the number of heat sinks **256** in LED light source **100**. As a result, LED light source **100** may be lighter, less expensive, and easier to assemble than an LED light source **100** having a discrete heat sink **256** for each cartridge **116**, all else being equal.

Non-Planar Light Guides

In accordance with another aspect of this disclosure, which may be used with one or more other aspects disclosed herein, the light guide **108** may have a light emitting surface **112** that is not planar. For example, the light emitting face may be round.

As exemplified in FIGS. **55-56**, LED light source **100** is formed in the shape of a typical incandescent lightbulb having an engagement end **380** for insertion into a light fixture socket. Engagement end **380** may be any type of bulb base known in the art for electrical engagement with a light fixture socket. For example, engagement end **380** may be a screw base as shown (e.g. a medium base E**27**), a twist & lock base (e.g. a 10 mm GU**10**), or a pin base (e.g. a 9 mm G**9**). Similar to other embodiments, LED light source **100** includes a removable cartridge **116** that allows many or most components of LED light source **100** to be reused.

As shown, LED light source **100** may include a diffuser **136**, a light guide **108**, a cartridge **116**, a housing **104**, and a bulb engagement end **380**. Cartridge **116** is removably mounted to housing **104** to emit light into light guide first end face **144**, and light guide **108** re-emits the light from light emitting locations **114** towards diffuser **136** which radiates light outwardly. Cartridge **116** is electrically connected (e.g. by wires or wirelessly) to engagement end **380** to power the cartridge LED(s) **164**. Engagement end **380** delivers power to cartridge **116** from an external power source when connected to a light fixture socket.

Light guide **108** can take any shape that allows light to propagate longitudinally through internal reflection and emit through light emitting locations **114** on a light emitting face **112**. Earlier embodiments of light guide **108** (see, e.g. FIG. **2**) show a light guide **108** formed as a thin sheet. An advantage of this design is that it allows light guide **108** to emit light across a large area light emitting face **112**, which may be desirable for providing even lighting over large rooms (e.g. offices) for example. FIG. **56** exemplifies an alternative embodiment including a light guide **108** formed as a rod. An advantage of this design is that it provides a light emitting face **112** facing many directions at once (e.g. 360 degree coverage). This can be desirable where LED light source **100** is formed as a lightbulb for use in light fixtures designed for lightbulbs that emit light in all directions (as in a traditional incandescent lightbulb). In the illustrated embodiment, light guide **108** is formed in the shape of a cylindrical rod having a circularly curved light emitting face **112**. In other embodiments, light guide **108** may be formed in the shape of a rod having a different cross-section, such as triangular, rectangular, oval, or another regular or irregular cross-sectional shape, which may be solid or hollow.

Diffuser **136** can take any shape suitable for receiving and radiating light from light guide **108**. For example, diffuser **136** may be shaped according to any known light bulb shape, such as a standard incandescent light bulb shape (bulb shape "A") as shown. In other examples, diffuser **136** may have a bulb shape with a North American letter designation, such as A, B, BT, BR, C, CA, CW, CP, E, ER, F, G, HK, K, MB, MR, P, PAR, PS, R, S, and T among others. As discussed previously, diffuser **136** is at least partially translucent, and may be completely transparent.

As exemplified in FIGS. **101-103**, LED light source **100** includes a diffuser **136** held between two housing end members **224**. As show, light transmitting surface **136** has a substantially rectangular (e.g. square) cross-sectional shape. FIG. **105** shows another embodiment including a light transmitting surface **136** having a substantially circular cross-sectional shape. In other embodiments, light transmitting surface **136** can have any other regular or irregular cross-sectional shape.

Referring to FIGS. **56** and **57**, light guide **108** extends within diffuser **136** to emit light towards diffuser **136** to be radiated outwardly. Light guide **108** may be secured within diffuser **136** in any manner. In the illustrated embodiment, LED light source **100** includes a light guide mount **384**, which connects light guide **108** to diffuser **136**. As shown, light guide mount **384** may be connected to diffuser **136** proximate diffuser lower end **388**, and hold a lower portion **392** of light guide **108**, whereby an upper portion **396** of light guide **108** extends upwardly away from light guide mount **384** into diffuser **136**.

Light guide mount **384** may be secured to diffuser **136** in any manner. In the illustrated embodiment, light guide mount **384** is removably secured to diffuser **136**. An advantage of this design is that is allows light guide mount **384** to be removed to access diffuser **136** for repair or replacement (e.g. replacement with a similar to different light guide **108**). As shown, light guide mount **384** has external threads **398** which are sized to mate with internal threads **404** within light guide lower end **388**. Alternatively, light guide mount **384** may be removably or permanently secured to diffuser **136** by a fastener (e.g. screws, bolts, rivets, hooks and loops, magnets, snaps), welds, or adhesives.

Light guide mount **384** can have any configuration suitable for holding light guide **108** within diffuser **136**. In the illustrated embodiment, light guide mount **384** includes a recess or aperture **410** which is sized to receive light guide lower portion **392** with a press fit. Alternatively or in addition, light guide mount **384** may be connected to light guide **108** by screws, straps, adhesive, or welds for example. In some embodiments, light guide mount **384** may be integrally formed with light guide **108**.

Still referring to FIGS. **56** and **57**, cartridge **116** may be removably connected to housing **104** in any manner. In the illustrated example, housing **104** includes a housing recess **140** sized to receive cartridge **116**. Cartridge **116** may fit into housing recess **140** with a press fit. Alternatively or in addition, cartridge **116** may be connected to housing **104** by a releasable fastener (e.g. screws, bolts, hooks and loops, magnets, or snaps).

Optionally, a heat sink may be provided. As exemplified, housing **104** includes a heat sink **256** that is thermally connected to cartridge **116** when cartridge **116** is connected to housing **104**. As discussed previously, heat sink **256** can have any design suitable for removing heat from cartridge **116**. In the example shown, heat sink **256** includes a plurality of fins **412** which extend outwardly from housing **104**.

Housing **104** may be connected to diffuser **136** in any manner that holds the LED(s) **164** of cartridge **116** in close proximity (abutting or even in contact) with light guide first end face **144**. Preferably, housing **104** is removably connected to diffuser **136**. As exemplified in FIGS. **57-59**, removing diffuser **136** can provide access to cartridge **116** for repair or replacement. Returning to FIGS. **56-57**, housing **104** may have a removable threaded connection to diffuser **136**. For example, housing **104** may include external threads **416** that are removably engageable with diffuser threads **404**. Alternatively or in addition, housing **104** may be removably connected to diffuser **136** by another releasable fastener (e.g. screws, bolts, hooks and loops, magnets, bayonet mount, or snaps).

Controller

In accordance with another aspect of this disclosure, which may be used with one or more other aspects disclosed herein, LED light source **100** may include a controller **420**, which is communicatively coupled to cartridge **116**. Controller **420** may provide programmable and/or remote control of one or more aspects of the light emitted by the light source **100**, (e.g., one or more of the light intensity, the number of LEDs that are energized, the color of the LEDs that are energized, the length of time that the LEDs are energized, the sequence in which the LEDs are energized). For example, controller **420** may be electrically interposed between bulb engagement end **380** and cartridge **116** to control the electrical power to cartridge **116**.

Controller **420** may be integrated with cartridge **116**. Alternatively, controller **420** may be a discrete component separate from cartridge **116**, as shown in the illustrated embodiment. An advantage of this design is that it allows controller **420** to be reused as cartridge **116** is replaced, and allows controller **420** to be shielded from heat that cartridge **116** may generate. For example, a heat shield **424** formed of heat insulating material may be positioned between cartridge **116** and controller **420** to shield controller **420** from heat generated by cartridge **116**. Heat shield **424** may be made of any thermally insulating material suitable for shielding controller **420** from the heat generated by cartridge **116** (e.g. having a thermal conductivity of less than 1 W/mK at 20° C.).

FIGS. **58**, **59**, and **57** illustrate a method of removing cartridge **116** from LED light source **100**, such as for repair or replacement. As shown, diffuser **136** may be disconnected from housing **104** to expose cartridge **116**, and then cartridge **116** may be removed from housing **104** and optionally replaced with a new or repaired cartridge **116**.

FIGS. **60-62** illustrate an alternate method of removing cartridge **116**. In the illustrated embodiment, LED light source **100** is formed as a light bulb including a bulb engagement end **380** and a housing **104**. The housing **104** includes a diffuser **136** (also referred to as a light transmitting surface), and defines an interior **428**. A cartridge **116** is receivable in the housing interior **428**, and removable such as for repair or replacement. As exemplified, housing **104** includes a housing recess **140** having an insertion end **168** for inserting and removing cartridge **116** and light guide **108**. When cartridge **116** and light guide **108** are inserted into housing recess **140**, cartridge **116** is electrically connected to bulb engagement end **380** to receive power from a light fixture socket, and LED(s) **164** of cartridge **116** are oriented to emit light into light guide end face **144**.

It will be appreciated that, in any embodiment, cartridge **116** and light guide **108** may together form a disposable and replaceable unitary component of LED light source **100**. An advantage of this design is that it allows cartridge **116** to be well aligned and permanently connected to light guide **108**, ensuring efficient transmission of light from cartridge **116** into light guide **108**. Alternatively, cartridge **116** may be separable from light guide **108** so that light guide **108** can be reused in connection with many cartridges **116**. An advantage of this design is that it allows more of LED light source **100** to be reused and less of LED light source **100** to be disposed, thus decreasing the cost of operating LED light source **100** and decreasing the size, weight, and environmental impact of the disposable components of LED light source **100**.

Still referring to FIGS. **60-62**, recess insertion opening **184** may be positioned anywhere proximate an outer surface of LED light source **100** that allows for user access to remove and replace cartridge **116**. In the illustrated example, insertion opening **184** is provided on diffuser **136**. An advantage of this design is that it provides user access to insertion opening **184** to remove and replace cartridge **116** while bulb engagement end **380** remains inserted in a light fixture socket. Reference is now made to FIGS. **63-65**. In alternative embodiments, insertion opening **184** is provided on bulb engagement end **380**. An advantage of this design is that cartridge **116** is prevented from being removed (accidentally or intentionally) while bulb engagement end **380** is inserted in a light fixture socket. This may be an important consideration in some environments, such as factories with heavy machinery that produce vibrations that may cause a cartridge to fall out. Also, this design allows diffuser **136** to have a contiguous outer surface without openings or holes that can allow dirt or liquids to enter. This may be advantageous for outdoor uses of LED light source **100**.

Recess **140** can have any shape suitable for receiving light guide **108** and cartridge **116**. FIGS. **60-65** illustrate embodiments having rod shaped light guides **108**, including a cylindrical light guide **108** (FIGS. **60-62**), and a square cross-section light guide (FIGS. **63-65**). Recess **140** may be a bore hole in LED light source **100** shaped to correspond with light guide **108**. For example, FIGS. **60-62** show a cylindrical recess **140**, and FIGS. **63-65** show a square cross-section recess **140**.

Referring to FIGS. **60-62**, light guide second end face **148** may define a portion of LED light source outer surface **432** when inserted in recess **140**. An advantage of this design is that it can allow easy access to remove light guide **108** to access cartridge **116** for repair or replacement. FIGS. **66-68** illustrate an alternative embodiment where LED light source **100** includes an end cap **440** that closes light guide **108** and cartridge **116** within recess **140**, and which defines a portion of the LED light source outer surface **432**. An advantage of this design is that end cap **440** may allow for better control over the character of the light emitted through light guide second end face **148**. For example, end cap **440** may be constructed with similar or identical light transmission properties as diffuser **136** (diffusivity, color, etc.) such that light emitted from light guide second end face **148** through end cap **440** is characteristically similar to light emitted by light guide light emitting face **112** through diffuser **136**.

Cartridge **116** may be positioned anywhere within recess **140** that allows cartridge LEDs **164** to emit light into a light guide end face **144** or **148**. FIGS. **60-62** show an example in which cartridge **116** is positioned at recess inner end **172** proximate bulb engagement end **380**. An advantage of this design is that it shortens the electrical connection distance between cartridge **116** and bulb engagement end **380**, which may simplify the electrical wiring within LED light source **100**. FIGS. **66-68** exemplify an alternate example in which cartridge **116** is positioned proximate recess insertion end

168 when inserted in recess 140. As shown, light guide 108 is positioned inwardly of cartridge 116. An advantage of this design is that it can allow access to cartridge 116 (e.g. for repair or replacement) without having to remove light guide 108.

FIGS. 69-71 illustrate another embodiment including a first cartridge $116_1$ positioned proximate recess inner end 172, a second cartridge $116_2$ positioned proximate recess insertion end 168, and a light guide 108 positioned between the first and second cartridges $116_1$ and $116_2$. Cartridge $116_1$ emits light into light guide first end face 144, and cartridge $116_2$ emits light into light guide second end face 148. An advantage of this design is that it allows for relatively greater and more even or controlled illumination of light guide 108. Cartridges $116_1$ and $116_2$ may be permanently connected to light guide 108, and disposable with light guide 108. Alternatively, cartridges $116_1$ and $116_2$ may be separable from light guide 108 so that light guide 108 can be reused with new or repaired cartridges 116.

Direct Emission of Light from an LED

In accordance with another aspect of this disclosure, which may be used with one or more other aspects disclosed herein, a light guide 108 may not be used. Instead, as exemplified in FIGS. 72-74, LED light source 100 may not include a light guide 108. An advantage of this design is that the light attenuation, cost, and complexity associated with including a light guide 108 is mitigated. In the illustrated example, cartridge 116 is removably connected to housing 104 beneath a diffuser 136. As shown, diffuser 136 may be removable to provide access to remove or replace cartridge 116.

Diffuser 136 can have any shape suitable for radiating light from cartridge 116 onto a subject to be illuminated. In the illustrated embodiment, diffuser 136 is dome-shaped, such that LED light source 100 has the shape of a typical incandescent light bulb. FIGS. 75-77 illustrate an alternate embodiment where diffuser 136 is substantially flat (e.g. planar), such that LED light source 100 has the shape of a halogen light bulb. As shown, housing 104 includes a recess 140 to accommodate cartridge 116 beneath the flat diffuser 136.

Reference is now made to FIGS. 78-80. As shown, LED light source 100 may include a cartridge 116, containing a plurality of LEDs 164, which is removably receivable in housing interior 428. As shown, LED light source 100 may be free of light guides in some embodiments. Instead, cartridge 116 may emit light directly towards light transmitting surface 136. An advantage of this design is that it may reduce light attenuation associated with light transmission through a light guide.

LEDs 164 may be provided on any one or more faces of cartridge 116. In the illustrated embodiment, LEDs 164 are provided on a plurality faces, namely opposed cartridge faces 166 and 260. An advantage of this design is that it allows LEDs 164 to emit light in opposite directions, and thereby better illuminate light transmitting surface 136, which radiates the light onto the subject to be illuminated.

Each cartridge face 166 and 260 may include any number of LEDs 164 arranged in any configuration. In the illustrated embodiment, LEDs 164 are distributed and spaced apart longitudinally along the bulb axis 444. An advantage of this design is that it allows cartridge 116 to have a narrower width 448, and therefore require a smaller insertion opening 184 to be formed in light transmitting surface 136.

FIGS. 81-83 illustrate an embodiment of LED light source 100 similar to FIGS. 75-77, except, for example that LED light source 100 has the shape of a halogen light bulb. Also, housing 104 is shown including a heat sink 256. As shown, heat sink 256 may define an outer surface of housing 104 and may encircle cartridge 116 when cartridge 116 is received in housing interior 428. An advantage of this design is that it may provide an enlarged area heat sink 256, which can allow heat produced by cartridge 116 to be dissipated more efficiently.

Reference is now made to FIGS. 84-86. In some embodiment, cartridge 116 may not include an end cap 440. As shown, this can substantially reduce cartridge width 448, and consequently allow recess width 192 and insertion opening width 452 to be narrowed. As a result, light transmitting surface 136 may have a greater surface area, all else being equal.

In some embodiment, cartridge outer end portion 456 may extend outboard of light transmitting surface 136. An advantage of this design is that cartridge 116 may be more easily grasped by hand for removal and replacement. In other embodiments, cartridge 116 is wholly positioned within housing 104.

Reference is now made to FIGS. 87-89. In some embodiments, LED light source 100 may accommodate a plurality of cartridges 116 within housing 104. An advantage of this design is that it may allow just one cartridge 116 containing a subset of the LED light source's LEDs 164 to be replaced (while keeping the other cartridge(s) 116 in place), instead of having to replace a single cartridge 116 containing all of the LEDs 164 within light source 100. Consequently, fewer working LEDs 164 may be disposed when a cartridge 116 is removed due to one or more failed LEDs 164.

In the illustrated embodiment, housing 104 includes two recesses 140, each of which is sized to receive a cartridge 116. In alternative embodiments, housing 104 may include a recess 140 which can accommodate a plurality of cartridges 116. Cartridges 116 may be positioned and oriented anywhere within housing 104. In the illustrated embodiment, each cartridge 116 is aligned parallel with and spaced apart from bulb axis 444. An advantage of this design is that cartridges 116 may evenly illuminate light transmitting surface 136.

Reference is now made to FIGS. 90-93. Cartridge 116 may include any number of faces 166, each of which may include any number of LEDs 164. In the illustrated example, cartridge 116 has a cross-shape including eight cartridges faces 166, and each cartridge face 166 is shown including two LEDs 164. Thus, an advantage of having a cartridge 116 with many faces 166 is that it can accommodate a greater number of LEDs 164, which may collectively be capable of emitting greater light intensity, all else being equal.

In some embodiment, cartridge 116 may include a heat sink 256 positioned behind and between adjacent cartridge faces 166. For example, behind each cartridge front face 166 may be a cartridge rear face 260 which is thermally coupled to a heat sink 256. As shown, heat sink 256 may have a cross-shaped cross-section with outer faces 264 in thermal contact with cartridge rear faces 260. An advantage of this design is that it may provide a compact arrangement of cartridge faces 166 and effective dissipation of heat generated by LEDs 164.

Reference is now made to FIGS. 94-97. Recess 140 may be formed in any portion of housing 104, and may be oriented in any direction. In the illustrated embodiment, housing recesses 140 are oriented transversely (e.g. perpendicularly) to bulb axis 444. As shown, this allows cartridges 116 to be inserted laterally into housing 104. An advantage of this design is that depending on the shape of LED light

source **100**, this may allow housing **104** to accommodate more cartridges **116** bearing more LEDs **164**.

As shown, each cartridge **116** may be shaped and inserted like a tray bearing one or more LEDs **164** on one or more of its surfaces **166** and **260**. In the illustrated example, there are three cartridges **116** and each cartridge includes one or more LEDs **164** on its upper surface **166**. FIGS. **98-100** illustrate another embodiment including cartridges **116** having LEDs **164** provided on their lower surfaces **260**. Alternatively, or in addition, one or more of cartridges **116** may have LEDs **164** on both surfaces **166** and **260**.

Weather Sealing

In accordance with another aspect of this disclosure, which may be used with one or more other aspects disclosed herein, in some embodiments LED light source **100** may be weather-sealed. An advantage of this design is that it may allow LED light source **100** to be safely used in outdoor environments. As exemplified in FIGS. **75-77**, housing **104** is shown including a seal **436** (e.g. a resiliently deformable member, such as an O-ring) that engages with diffuser **136** (e.g. by physical contact) when diffuser **136** is connected to housing **104**. As shown, seal **436** may be provided on an outer surface **368** of housing **104** surrounding cartridge **116**, and engage with a rear surface **174** of diffuser **136**. Alternatively, or in addition, diffuser **136** may include a seal **436** that engages housing **104** when diffuser **136** is connected to housing **104**. In any case, seal **436** may inhibit the passage of liquid, dirt, and/or air through the interface of diffuser **136** and housing **104**, thereby protecting cartridge **116** within.

Energy Storage Member and/or Energy Generating Member

In accordance with another aspect of this disclosure, which may be used with one or more other aspects disclosed herein, in some embodiments, LED light source **100** may include an energy storage member **460** and/or an energy generating member **476** (see for example FIGS. **101-103**). Energy storage member **460** may be any device suitable for powering cartridge **116**. In some embodiments, energy storage member **460** has sufficient power capacity when charged to power cartridge LEDs **164** to at least 60% power rating for at least an hour. For example, energy storage member **460** may be one or more batteries or supercapacitors. An advantage of this design is that it can allow LED light source **100** to operate while untethered to an external power source, such as mains electric power. Further, it may be useable as an emergency lighting source when there is a power outage.

The energy storage member may be provided at any location. For example, the energy storage member may be provided in the apparatus itself, for example, a lighting fixture, a frame as discussed subsequently or any other apparatus that has the LED light source. Alternately, the energy storage member may be part of a power cord that electrically connects the apparatus to a power outlet (e.g., a household power outlet). Therefore, the energy storage member may be provided in or as part of the electrical plug that is plugged into a wall outlet or in line with the power cord that extends between the electrical plug and the apparatus.

As exemplified, energy storage member **460** may be positioned within housing **104**. For example, housing **104** may include an energy storage recess **464** sized to accommodate energy storage member **460**. In some embodiments, as discussed previously, energy storage recess **464** may be weather sealed to inhibit entry of water, snow, and dirt into storage recess **464** when closed. An advantage of this design is that it can allow LED light source **100** to be used outdoors or in other hazardous environments. For example, energy storage recess **464** may include an insertion opening **472** for inserting energy storage member **460** into energy storage recess **464**, and an energy storage recess cover **468** which closes and seals insertion opening **472**.

Energy storage recess cover **468** may be movable between a closed position in which energy storage recess cover **482** closes insertion opening **472**, and an open position in which energy storage recess cover **482** is moved away from insertion opening **472** to allow access to energy storage member **460**. An advantage of this design is that it can allow access to energy storage member **460** for repair or replacement. In other embodiments, energy storage recess cover **468** is permanently connected or integrally formed with insertion opening **472**, prohibiting energy storage recess **464** from opening once closed. An advantage of this design is that it can provide a more robust seal between recess cover **468** and insertion opening **472**.

In some embodiments, LED light source **100** may alternately or in addition include an energy generating member **476** that is electrically connected to energy storage member **460** and/or the LEDs. An advantage of this design is that it can continuously or periodically recharge energy storage member **460** to allow LED light source **100** to operate autonomously (i.e. without user interaction) for a prolonged period of time. In the illustrated embodiment, energy generating member **476** is a solar panel. As shown, solar panel **476** may form or be incorporated into energy storage recess cover **482**. In other embodiments, energy generating member **476** may include a wind generator (not shown). In other embodiments, LED light source **100** may not include an energy generating member **476**, and instead depend upon energy storage member **460** being recharged by other means or being replaced.

Mounting Member

In accordance with another aspect of this disclosure, which may be used with one or more other aspects disclosed herein, LED light source **100** may include a mounting member **480** (see for example FIGS. **101-103**). Mounting member **480** can be any device that can secure LED light source **100** onto a surface. An advantage of this design is that it allows LED light source **100** to be more versatile in its placement. In the illustrated embodiment, LED light source **100** includes a spike **480** connected to and extending outwardly of housing **104**. Spike **480** may be pushed into a ground surface (e.g. soil) to support LED light source **100** in an upright orientation on that ground surface. FIG. **104** shows another embodiment including a suction cup **480** that can be suctioned onto a smooth surface, such as a window or tile.

Returning to FIGS. **101-103**, mounting member **480** can extend from any portion of LED light source **100**. In the illustrated embodiment, mounting member **480** extends longitudinally outwardly from housing end member $\mathbf{224}_1$ and energy storage member **460** is positioned within housing end member $\mathbf{224}_2$. An advantage of this design is that it can provide ample space for an energy generating member **476** at the end member $\mathbf{224}_2$ where energy storage member **460** is located. FIGS. **107-108** exemplify another embodiment in which mounting member **480** extends longitudinally from housing end member $\mathbf{224}_1$ and energy storage member **460** is positioned within housing end member $\mathbf{224}_1$. An advantage of this design is that it can shift the weight of the energy storage member **460** to proximate the mounting member **480**, which can improve the mounting stability of LED light source **100**.

Partial Emission of Light

In accordance with another aspect of this disclosure, which may be used with one or more other aspects disclosed

herein, a light guide having a non-planar emission surface may be provided with a diffuser which emits light in only one or more directions. An advantage of this aspect is that light may be directed to illuminate a portion of the space surrounding the light source **100**. As exemplified in FIG. **106**, light transmitting surface **136** includes a light emitting portion **484**, and an opaque portion **488** (identified with crosshatching). Light emitting portion **484** is at least translucent (i.e. translucent or transparent) to permit light from light guide **108** to pass therethrough and illuminate the surrounding volume. Opaque portion **488** is opaque and in some cases reflective to light from light guide **108**. An advantage of this design is that it allows LED light source **100** to focus light emissions in some directions (i.e. through light emitting portion **484**) and to block light emissions in other directions (i.e. through opaque portion **488**). In the illustrated embodiment, light transmitting surface **136** includes one contiguous light transmitting portion **484** and one contiguous opaque portion **488**, which are substantially equal in size. In other embodiments, light transmitting portion **484** and opaque portion **488** may be discontiguous (e.g. striped or spotted) and may be represented in different proportions. It will also be appreciated that the opaque portion **488** may allow some light therethrough and accordingly may not be fully opaque.

An inner surface **174** of opaque portion **488** may be reflective (e.g. mirrored) to reflect light from light guide **108** to light emitting portion **484**. An advantage of this design is that at least a portion of light that strikes opaque portion **488** may be emitted outwardly from light emitting portion **484**.

Frame

In accordance with another aspect of this disclosure, which may be used with one or more other aspects disclosed herein, a frame, such as for art, may be provided with uses a light source having any one or more of the features set out herein. As exemplified in FIG. **109** to FIG. **111**, a frame **500** for artwork **504** is provided. The artwork **504** maybe a substantially planar 'picture-type' artwork, such as a photo, a print, a painting, or the like. Frame **500** includes one or more LED light source **100** to illuminate artwork **504**. As shown, LED light source **100** may include one or more light guides **108** which are endwise illuminated by LEDs and which emit light from a light emitting face **112** towards artwork **504** through light transmitting surface **136**. An advantage of frame **500** is that it can provide energy efficient and controllable illumination of an artwork **504**.

Frame **500** includes one or more side panels **508** that together define an inner opening **512** through which the artwork **504** is viewable. Inner opening **512** may extend in a plane **516**. Alternately, the frame may define an opening that extends in 3 dimensions. Inner opening **512** may be of any shape. For example, frame **500** may have the shape of a parallelogram (e.g. rectangle) having four side panels **508** connected end-to-end as shown. An advantage of this design is that most artwork is parallogrammatic so that a parallelogrammatic frame is widely compatible. In other embodiments, frame **500** may have any other regular or irregular shape formed by any other number of side panels **508**. For example, frame **500** may include just one side panel **508** formed in a circle, three side panels **508** connected end to end in a triangle, or a plurality of side panels **508** configured in the shape of a dog. Thus, frame **500** can have side panel(s) **508** shaped to accommodate artwork **504** of any shape.

As exemplified, frame **500** may also include one or more backing layers **520**, which cover a rear face **524** of artwork **504**. As shown, artwork **504** may be positioned between backing layer(s) **520** and the front face of frame side panels **508**. In the illustrated embodiment, frame **500** includes a rigid backer $\mathbf{520}_1$ (e.g. chip board) and a flexible backer $\mathbf{520}_2$ (e.g. paper). Artwork **504** may be attached directly to frame side panels **508**, or held in place against frame side panels **508** by backing layer(s) **520**. Frame **500** may also include a hanger **528** (e.g. wire hanger) secured to frame side panel(s) **508** or frame backing layer(s) **520**.

As discussed previously, and as exemplified in FIGS. **112-113**A, LED light source **100** may include one or more endwise-illuminated light guide **108** wherein each light guide **108** may extend longitudinally along part or all of any one or more of frame side panels **508**. For example, each light guide **108** may have a longitudinal length **152** that is at least 40%, 50%, 60%, 70%, 80% or 90% of the corresponding side length **532** of the frame inner opening **512**. An advantage of this design is that it allows light guides **108** to emit light over all or substantially the entire artwork **504**. In the illustrated embodiment, light guide **108** extends along each frame side panel **508**, and each light guide longitudinal length **152** is approximately equal to frame inner opening longitudinal length **532**.

As discussed previously, and as exemplified, LED light source **100** may include a plurality of LEDs **164** which are positioned to emit light into light guide end faces **144**. A diffuser **136** may be spaced inwardly towards an opposed side panel **508** of each light guide **108**. As exemplified, diffusers **136** may be formed as planar members that are end wise connected to form a closed perimeter around frame inner opening **512**. An advantage of this design is that it can allow diffusers **136** to diffuse all light emitted towards artwork **504** by light guides **108**. In other embodiments, LED light source **100** may not include a diffuser **136**. For example, the light emitted by light guide **108** may be sufficiently diffuse for the particular artwork **504** being illuminated. Alternately, a diffuser may overlie part or all of a light guide **108**. It will be appreciated that the diffuser may be non-planar (e.g., convex).

Referring to FIG. **111**, frame side panels **508** may be connected in any manner, such as by fasteners (e.g. screws, bolts, nails, rivets), magnets, snaps, press fits, or integral forming. In some embodiments, frame side panels **508** are removably connected. An advantage of this design is that it can allow for at least some disassembly to access LED light source **100** or other components that may require repair or replacement. In the illustrated embodiment, frame side panels **508** are connected by frame corner members **540**. As shown, each frame corner member **540** may removably connect the two adjacent frame side panels **508**. Removing a frame corner member **540** may provide access to, e.g. LEDs, which may be carried on a removable cartridge or a housing end member **224** located adjacent the frame corner member **540**.

As exemplified in FIG. **112**, LED light source **100** may include any arrangement of LEDs **164** suitable to emit light into light guide end faces **144** and/or **148**. In the illustrated example, each light guide **108** has an end face **144** endwise illuminated by an LED **164** (or group of LEDs **164**) proximate a different corner of frame **500**. As exemplified, one housing end member **224** holding the LEDs **164** is positioned proximate a different corner of the frame **500**. An advantage of this design is that it can provide a relatively large space within frame **500** for the housing end member **224**, LEDs **164**, and any associated heat sink, wiring and/or electronics.

Referring to FIG. **113**B, in some embodiments, there may be two housing end members **224** holding LEDs **164**, which illuminate light guide end faces **144** or **148** of different light

guides **108** associated with different frame side panels **508**, located proximate one frame corner **540**. An advantage of this design is that two (sets) of LEDs **164** may be accessible from one corner, such as by moving frame corner member **540**. In some embodiments, one or more (or all) light guides **108** within frame **500** may be illuminated from both of their end faces **144** and **148**, by positioning LEDs **164** that illuminate in two directions within or proximate each frame corner member **540**. An advantage of this design is that it can provide greater, more even, or better controlled illumination of each light guide **108**.

As exemplified in FIGS. **114** and **115**, in some embodiments, one or more LEDs **164** may be positioned and oriented to each emit light simultaneously into two light guide end faces **144** or **148**. An advantage of this design is that it can reduce the number of LEDs **164** and associated components of LED light source **100**. In the illustrated embodiment, an LED **164** is positioned within each of two frame corner members **540** and oriented to emit light into light guide end faces **144** of the two light guides **108** that meet at that corner **540**. As shown, LED **164** emits light into light guides **108** at an angle that results in internal reflection and longitudinal propagation of the light along the longitudinal length of each light guide **108**.

As exemplified in FIG. **116**, in some embodiments, frame side panel **508** may be configured to hold LED light source **100**, or components thereof, in position. As shown, frame side panel **508** may include diffuser retention slots **544** which retain diffuser **136**, and light guide retention slots **548** which retain light guide **108**. Light guide retention slots **548** may also hold reflector **132** in contact with light guide rear face **128**.

Frame **500**, including LED light source **100**, may be powered by any power source. In the illustrated embodiment, LED light source **100** includes an energy storage member **460**, positioned, e.g., within an energy storage recess **464**, for supplying power to frame **500**. An advantage of this design is that it allows frame **500** to operate where an external power connection may be unavailable or inconvenient. FIG. **117** shows an example including a power cord **552** which is electrically connectable to external power. An advantage of this design is that it does not rely on an internal energy storage member which can require periodic replacement or recharging. FIG. **118** shows another example including a power cord **552** and an energy storage member **460**. An advantage of this design is that the external power source through power cord **552** can charge energy storage member **460**, which can supply power to frame **500** during power outages.

If there is a power outage, the LED light source of the frame may alternately operate as emergency lighting. It will be appreciate that if a power cord is provided as in FIG. **118**, then the energy storage member may be charged from the power cord at any time the power cord is plugged in. Accordingly, if the power cord is plugged in at all times (or hard wired to an electrical supply) then the LED light source may be available as a fully charged emergency lighting source.

As exemplified in FIG. **116**, in some embodiments, light emitted by LED light source **100** (whether directly from light guide **108** or radiated through diffuser **136**) may directly illuminate artwork **504**. As shown, there may not be provided any covering that overlays the artwork front face **556**. An advantage of this design is that it allows the artwork **504** to receive light unattenuated by a covering, and may permit users to physically touch the artwork **504** if appropriate. For example, the artwork front face **556** may include media (e.g. paint) which creates an uneven surface texture with which users can interact. FIG. **119** shows an alternative embodiment including a transparent cover **560** (e.g. transparent glass or plastic) which overlays artwork front face **556**. An advantage of this design is that it can protect artwork **504** from user contact and the environment (e.g. liquids and humidity). In some embodiments, cover **560** is configured to reflect, absorb, or otherwise obstruct passage of specific light wavelength bands. For example, cover **560** may be substantially opaque to UV light that may damage artwork **504**. Cover **560** may be positioned rearwardly of LED light source **100** as shown, or outwardly of LED light source **100** as in FIG. **120**. An advantage of positioning cover **560** outwardly of LED light source **100** is that it can also provide protection for light source **100**.

As exemplified in FIGS. **121** and **122**, in some embodiments, LED light source **100** may be spaced forwardly of the artwork **504** and/or frame opening plane **516**. For example, light guide rear side **178** and/or diffuser rear side **154** may be outwardly spaced apart from the plane **516** of frame inner opening **512** by a distance **536** of, e.g., 0.25 to 1 inches. An advantage of this design is that it can increase the angle of incidence between light emitted by LED light source **100** and artwork **504**, which can allow the emitted light to better distribute across the artwork front face **556**. As exemplified, frame **500** may include a spacer **560** that abuts artwork **504** to retain the rearward spacing between LED light source **100** and artwork **504**. Spacer **560** may be an integral component of frame side panels **508** as shown, or a separate component from frame side panels **508**.

As exemplified in FIG. **123**, in some embodiments, light guide light emitting face **112** may be angled to face rearwardly from vertical, and non-parallel to frame opening plane **516** (and therefore artwork **504**). An advantage of this design is that it can allow light emitted by LED light source **100** to be directed towards frame opening plane **516**, so that a greater portion of the emitted light strikes artwork **504**, and therefore provides greater illumination of artwork **504**, all else being equal.

Light guide light emitting face **112** can have any surface profile suitable for illuminating artwork **504**. In the illustrated example, light guide light emitting face **112** is substantially planar and angled to face rearwardly from vertical towards opening plane **516**. FIGS. **124** and **125** show other examples including a light guide light emitting face **112** that is convexly (FIG. **124**) and concavely (FIG. **125**) curved between light guide rear side **178** and front side **182**. FIG. **126** shows another example including a light guide light emitting face **112** that has a rear concave portion **564** and a front convex portion **568**.

Light guide light emitting face **112** may be at a non 0 degree angle to an axis that is perpendicular to the front face of the artwork, e.g., non-parallel with diffuser **136** as exemplified in FIGS. **124-126**, or parallel with an axis that is perpendicular to the front face of the artwork. In some embodiments, diffuser **136** may be angled to face rearwardly from vertical towards opening plane **516**. An advantage of this design is that it can allow light radiated by diffuser **136** to be focused towards frame opening plane **516**, so that a greater portion of the radiated light strikes artwork **504**, and therefore provides greater illumination of artwork **504**, all else being equal. Similar to light guide light emitting face **112**, diffuser **136** may be substantially planar, concave (FIG. **127**), or convex (FIG. **128**). FIG. **129** shows another example including a diffuser **136** having a rear concave portion **572** and a front convex portion **576**.

As exemplified in FIG. **130**, in some embodiments, LED light source **100** may not include a diffuser. As shown, light emitted from light guide light emitting face **112** may emit light inwardly towards frame inner opening plane **516** without passing through a diffuser. In this case, light guide **108** may emit sufficiently diffuse light for the particular artwork **504** being illuminated so that a diffuser is unnecessary or unwanted. An advantage of this design is that it avoids the cost, weight, and light attenuation associated with a diffuser. As exemplified, the light emitting face **112** faces towards the artwork and is curved so as to emit light so as to spread out across the front face of the artwork.

As previously discussed, LED light source **100** may include any number of reflectors **132** associate with any faces of light guide **108**. For example, LED light source **100** may include reflector(s) **132** positioned so that collectively they reflect light emitted from two or more faces of light guide **108** other than light guide light emitting face **112**. An advantage of this design is that less light propagating through light guide **108** may be lost through faces other than light emitting face **112**. As a result, the efficiency of LED light source **100** may be improved. In the illustrated embodiment, LED light source **100** includes reflectors **132** positioned adjacent light guide bottom face **128**, light guide rear side **178**, and light guide front side **182**. The reflectors **132** may be one contiguous reflector or three discrete reflectors. The reflectors **132** may be in contact with or spaced apart from their respective faces **128**, **178**, and **182**. In some embodiments, reflector **132** of light guide front side **182** may extend inwardly beyond light emitting face **112**. An advantage of this design is that it allows reflector **132** to reflect stray light emitted from light emitting face **112** back towards frame inner opening **512** (and artwork **504**).

The artwork may be secured in the frame by any method known in the art. For example, the artwork may be unmounted and stretched when mounted in the frame. As exemplified in FIG. **131**, frame **500** holds artwork **504** in a manner that conceals a peripheral portion **580** of artwork **504**. An advantage of this design is that it hides the unsightly peripheral portion **580** which is fastened to frame **500** (e.g. for the purpose of stretching the artwork **504** flat). In the illustrated embodiment, a rear portion **584** of frame side panel **508** includes an artwork retention slot **588** sized to receive and firmly grasp artwork peripheral portion **580**. As shown, artwork retention slot **588** is positioned rearward of LED light source **100** and therefore hidden from view.

Artwork retention slot **588** can hold artwork peripheral portion **580** in any manner. In the illustrated embodiment, artwork retention slot **588** includes a resiliently deformable member **592** that allows artwork peripheral portion **580** to be wedged into artwork retention slot **588**. An advantage of this design is that it provides a non-destructive, selectively removable manner of holding artwork peripheral portion **580**.

FIG. **132** exemplifies another embodiment in which artwork **504** is applied to (e.g. bonded to) a canvas backing **596**, and a peripheral portion **604** of canvas backing **596** is held in artwork retention slot **588**.

Alternately or in addition to using light sources in one or more of the side panels, the light source **100** may back light part or all of the artwork. Backlighting may be used if the artwork is, e.g., translucent. As with the light source **100** used in the side panels, the light source used for back lighting may use a light source having any one or more of the features set out herein. As exemplified in FIG. **133-135**, frame **500** includes an LED light source **100** that backlights artwork **504**. LED light source **100** can include any number of light guides **108**, which have light emitting faces **112** that collectively underlay (are positioned rearward of the artwork and have a light emitting face **112** that faces towards the artwork) any portion (or all) of the area of frame inner opening **512**. In the illustrated embodiment, LED light source **100** includes two spaced apart light guides **108**, each endwise-illuminated by LEDs held by a housing end member **224**. As shown, light guides **108** are positioned rearward of frame inner opening plane **516** and artwork **504**. Light guides **108** can have any shape and orientation. In the illustrated embodiment, light guides **108** extend longitudinally in a horizontal direction, and are spaced apart in a vertical direction. In other embodiments, light guides **108** may extend longitudinally in a vertical direction or another direction, and may be spaced apart in any direction or side-by-side.

As exemplified, light emitting faces **112** are spaced rearwardly of artwork **504**. An advantage of this design is that it allows light emitted by light guides **108** to spread-out across a wider area before striking artwork **504**. For example, light emitting faces **112** may be spaced rearwardly of frame inner opening plane **516** by, e.g., 0.25 to 1 inches. In some embodiments, LED light source **100** may not include a diffuser between light emitting face **112** and artwork **504**. For example, the substrate of artwork **504** (e.g. canvas) may behave as a suitable diffuser for the art thereon.

As discussed previously and as exemplified, LED light source **100** may include a reflector **132** positioned rearwardly of light guides **108**. Reflector **132** may have a size that corresponds to the light guide rear faces **128** as in previous examples, or may extend over an area greater than light guide rear faces **128**. In the illustrated example, reflector **132** is sized to overlay substantially the entire frame inner opening **512**. An advantage of this design is that it allows reflector **132** to reflect light emitted (e.g. by reflection or otherwise) from artwork **504**, and therefore improve the lighting efficiency of frame **500**.

Frame **500** may include a LED light source **100** that provides side lighting, backlighting, or both. FIG. **136** shows an example of a frame **500** including an LED light source **100** which includes a light guide **108** rear of frame inner opening plane **516** to provide backlighting, and a light guide **108** positioned forward of frame inner opening plane **512** to provide side lighting.

As exemplified in FIGS. **137-138**, LED light source **100** may include backlighting light guides **108** illuminated from one or both end faces **144** and **148**. For example, FIG. **137** shows light guides **108** illuminated from one end face **144** or **148** each. As discussed previously and as exemplified, light guides **108** may be illuminated from opposite end faces **144** or **148**. An advantage of this design is that it can provide more even illumination by spacing apart LEDs **164** on opposite sides of frame **500**. FIG. **138** shows another example including light guides **108** each illuminated at both of their respective end faces **144** and **148**.

LED light source **100** may include any number of light guides **108** of any longitudinal length **152** and transverse width **156**, so that collectively light guides **108** underlay any portion or all of the area of frame inner opening **512**. The illustrated example includes two light guides **108** that collectively underlay approximately 15% of the area of frame inner opening **512**. FIG. **139** shows another example including four light guides **108** that collectively underlay approximately 75% of the area of frame inner opening **512**. In some cases, it may be preferable to have light guide(s) **108** that collectively underlay a wide area (e.g. at least 25%) of frame inner opening **512** to more evenly backlight artwork **504**.

Alternatively or in addition, LED light source **100** may include a plurality of light guides **108** each having only one light emitting face **112**. An advantage of this design is that each artwork may be backlit by a light guide **108** illuminated by different LEDs **164** selected particularly for that artwork **504**. This can allow for greater variation in the backlighting of the two artworks **504**.

As exemplified in FIGS. **150-151**, in any of the embodiments of frame **500** described or shown herein, LEDs **164** of LED light source **100** may be carried on a removable cartridge **116** in accordance with any embodiment of cartridge **116** described or shown herein. The illustrated embodiment shows an example in which a cartridge **116** is insertable into and removable from a recess **140**, and when inserted the LED(s) **164** of cartridge **116** are positioned and oriented to emit light into a light guide first end face **144** or **148**. Recess **140** may include a recess opening **184** formed in frame corner **540** as shown, or a frame side panel **508**.

Light Mask

In accordance with another aspect of this disclosure, which may be used with one or more other aspects disclosed herein, a light mask **608** may be positioned between LED light source **100** and artwork **504**. Mask **608** can be any element that overlays only a portion of artwork **504** (i.e. does not overlay another portion of artwork **504**) and which alters the extent to which the LED light source **100** illuminates part of the artwork (e.g., inhibits, diminishes, filters, alters the colour of the light or otherwise alters light emitted by LED light source **100**). For example, as exemplified in FIG. **40**, mask **608** may be a discrete disc of material, or a coating (e.g. UV or fluorescent paint) applied to artwork rear face **524** or light guide light emitting face **112** or a further substrate. An advantage of this design is that it can provide fine control over the color and/or intensity of light that backlights different portions of artwork **504**. For example, it may be desirable to position a mask **608** behind a solid-black portion of artwork **504** to inhibit LED light source **100** from backlighting this portion and causing the black to appear as grey. In another example, it may be desirable to position a colored or fluorescent mask **608** under a similarly colored portion of artwork **504** to enhance the color of that portion of artwork **504**, which may otherwise tend to lose color saturation when backlit. In another example, it may be desirable to position a mask **608** behind a lighter portion of artwork **504** to reduce the backlighting of this portion and thereby enabling more backlighting of darker portions of the artwork. It will be appreciated that the mask **608** may be applied to one or more portions of a clear substrate (e.g., glass, plastic) which is of the same size as the artwork and may be separately mounted in the frame.

Positioning of the Light Emitting Locations

In accordance with another aspect of this disclosure, which may be used with one or more other aspects disclosed herein, the light emitting locations **114** may be distributed over the surface of light guide light emitting face **112** in any manner that provides a desired distribution of light output. In some embodiments, a density of light emitting locations **114** is substantially equal across the whole of light guide light emitting face **112**. An advantage of this design is that it allows large sheets of light guide material to be manufactured and divided arbitrarily for use in LED light sources **100** without concern over registering the light emitting locations **114** to particular portions of each light guide **108** cut from the sheet.

As exemplified in FIG. **141**, light guide **108** may have light emitting locations **114** unevenly distributed over light guide light emitting face **112**. An advantage of this design is that it can allow light guide **108** to emit light at a level of illumination that is substantially the same across light guide light emitting face **112**, or to emit light with a higher level of illumination in some areas compared to others, depending on the arrangement of light emitting locations **114**. For example, FIG. **141** shows a light guide **108** illuminated from light guide first end face **144** by LED(s) **164**. The quantum of light within light guide **108** decreases from first end face **144**, where no light has yet been deflected out or absorbed by light emitting locations **114**, to light guide second end face **148**, by which point much of the light traveling from light guide first end face **144** has been deflected out or absorbed by light emitting locations **114**. As shown, light guide **108** may have light emitting locations **114** that increase in density longitudinally from the first end face **144** to the second end face **148**. An advantage of this design is that this can allow light guide **108** to emit light at a level of illumination that is substantially the same along the longitudinal length **152** of light guide **108**. For example, the level of illumination emitted at the longitudinal middle **612** of light emitting face **112** may be ±20% of a level of illumination emitted proximate light guide first end face **144**, and in some examples ±10% of a level of illumination emitted proximate light guide first end face **144**.

FIG. **142** exemplifies another embodiment including a light guide **108** illuminated from both of light guide first and second end faces **144** and **148** by LEDs **164**. As shown, light guide **108** may have light emitting locations **114** that increase in density longitudinally from the first and second end faces **144** and **148** to the light guide longitudinal middle **612**. Once again, this can allow light guide **108** to provide a generally even level of illumination along the longitudinal length **152** of light emitting face **112**.

FIG. **123** exemplifies an example including a light guide **108** that is illuminated by LEDs from a longitudinal end face. In this example, the light emitting locations **114** proximate light guide rear side **178** may contribute illumination to a relatively smaller portion of artwork **504** than the light emitting locations **114** proximate light guide front side **182** due to their closer proximity to artwork **504**. In the illustrated example, light emitting locations **114** increase in density transversely from light guide rear side **178** to light guide front side **182**. An advantage of this design is that it can allow light guide **108** to provide more even illumination across the height of artwork **504** by allowing greater light to emit from the front portion of light guide light emitting face **112** which directs light to a relatively greater area of artwork **504**. As a result, a person viewing the artwork **504** may view a generally evenly illuminated image.

FIG. **143** exemplifies another embodiment including an LED light source **100** which illuminates an image **504** having a region **616** of a different color and/or density (e.g. color density) and/or light transmissivity. In some cases, the difference in color, density, or light transmissivity of the image region **616** may result in uneven illumination from image front face **556** when the entire image **504** is evenly backlit through image rear face **524**. In the illustrated example, light guide light emitting face **112** has light emitting locations **114** positioned to enhance the illumination of image region **616** so that a person viewing the image front face **556** views a generally evenly illuminated image, or optionally an enhanced illumination in one or more portions of the artwork. As shown, light guide light emitting face **112** may have a greater density of light emitting locations **114** aligned behind image region **616** than elsewhere on light guide light emitting face **112**. This can allow light guide **108** to provide greater illumination to image region **616** so that

image region **616** may appear brighter or, if image region **616** is a darker colour than the rest of the artwork, then to enable image region to, e.g., have about the same level or illumination.

Variable Reflection

In accordance with another aspect of this disclosure, which may be used with one or more other aspects disclosed herein, reflector **132** may provide different levels of reflection to thereby provide more light and/or different coloured lights in one or more regions.

FIG. **144** exemplifies another embodiment including an LED light source **100** which illuminates an image **504** having a region **616** of a different color, density, and/or light transmissivity. As shown, reflector **132** may include a reflector region **620**, which is aligned with the image region **616**. Reflector region **620** differs from the remainder of reflector **132** in that it is configured to reflect or emit (e.g. photoluminescently) light having a different color. For example, reflector region **620** may be colored, include (e.g. overlaid by) a filter material, or include (e.g. overlaid by) a photoluminescent material (e.g. fluorescent or phosphorescent material). For example, reflector region **620** may comprise UV or fluorescent paint. The color of light reflected or emitted by reflector region **620** may correspond with or compliment the color of image region **616**. This can help improve the color (e.g. color saturation or color accuracy) of image region **616** when backlit by LED light source **100**.

Variable Thickness of the Light Guide

In accordance with another aspect of this disclosure, which may be used with one or more other aspects disclosed herein, the thickness of the light guide may be varied so as to adjust the level of illumination emitted by one or more portions of the light guide.

FIG. **145-146** exemplify a light guide **108** having a thickness **160**. As shown in FIG. **145**, thickness **160** may be substantially constant along a dimension (such as longitudinal length **152** as shown, or transverse width) of light guide **108**. FIG. **146** exemplifies an embodiment in which thickness **160** varies along a dimension (such as longitudinal length **152** as shown, or transverse width) of light guide **108**. In the illustrated example, light guide thickness **160** decreases from the illuminated light guide end faces **144** and **148** to light guide longitudinal middle **612**. The variation in thickness can be used as an alternative to or in addition to variation in light emitting location density to control the level of illumination emitted from light guide light emitting face **112**, such as to attain generally even illumination emitted across light emitting face **112**. In other embodiments, light guide thickness **160** may increase or decrease in a different manner, such as increasing from longitudinal end faces **144** and **148** to light guide longitudinal middle **612** or decreasing from an illuminated light guide end face **144** to a non-illuminated light guide end face **148**.

Double Sided Frames

In accordance with another aspect of this disclosure, which may be used with one or more other aspects disclosed herein, frame **500** may be "double-sided" in that it provides support for two artworks **504** within frame inner opening **512** (see for example FIG. **147**). As exemplified, the artwork rear faces **524** face each other, and the artwork front faces **556** face outwardly in opposite directions. An LED light source **100** may be positioned between artwork rear faces **524** to provide backlighting to both artworks **504**. An advantage of this design is that it provides a compact arrangement for displaying two backlit artworks **504** (e.g. as compared with two separate frames **500** each containing one artwork **504**).

As shown in FIG. **148**, frame **500** may include first and second artwork retention slots $\mathbf{588}_1$ and $\mathbf{588}_2$ which hold peripheral portions $\mathbf{580}_1$ and $\mathbf{580}_2$ of first and second artworks $\mathbf{504}_1$ and $\mathbf{504}_2$ respectively. For example, frame side panels **508** may include first and second artwork retention slots $\mathbf{588}_1$ and $\mathbf{588}_2$ which face inwardly from proximate the first and second sides $\mathbf{624}_1$ and $\mathbf{624}_2$ of frame side panels **508**.

Double Sided Light Guide

In accordance with another aspect of this disclosure, which may be used with one or more other aspects disclosed herein, a light guide may have more than one light emitting face **112**. Therefore, a planar light guide may have opposed front and rear light emitting surfaces, As exemplified in FIG. **149**, LED light source **100** may include one or more light guides **108** including dual light emitting faces **112** and **128** which emit light in opposite directions towards artwork rear faces $\mathbf{524}_1$ and $\mathbf{524}_2$ of artworks $\mathbf{504}_1$ and $\mathbf{504}_2$ respectively. As shown, both light emitting faces **112** and **128** may include light emitting locations **114**. Accordingly, LED light source **100** may not include a reflector **132** positioned to reflect light emitted from either of light emitting faces **112** and **128**. As shown, light emitting faces **112** and **128** are spaced apart from the artwork rear face $\mathbf{524}_1$ or $\mathbf{524}_2$ they illuminate respectively.

In some embodiments, the light emitting locations $\mathbf{114}_1$ on light guide light emitting face **112** be the same or identical to the light emitting locations $\mathbf{114}_2$ on light guide light emitting face **128**. An advantage of this design is that substantially identical backlighting may be provided to both of artwork $\mathbf{504}_1$ and $\mathbf{504}_2$ from the light guide **108**. In the illustrated embodiment, the light emitting locations $\mathbf{114}_1$ on light guide light emitting face **112** differ from the light emitting locations $\mathbf{114}_2$ on light guide light emitting face **128**. An advantage of this design is that it allows dissimilar artwork $\mathbf{504}_1$ and $\mathbf{504}_2$ to be provided with different backlighting (e.g. so that a person viewing the artwork front faces $\mathbf{556}_1$ and $\mathbf{556}_2$ views generally evenly illuminated artwork). The differences in the light emitting locations **114** may be one of pattern (e.g. location density), type (e.g. discontinuities vs. light scattering material vs. photoluminescent spots), size or shape, color, or combinations thereof.

Alternate Modes of Operation

In accordance with another aspect of this disclosure, which may be used with one or more other aspects disclosed herein, frame **500** may include an LED light source that can be operated to emit light in a selected one of a plurality of modes. The plurality of modes may differ by color (e.g. select activation of LEDs of certain colors), level of illumination (e.g. power to the LEDs), region of illumination (e.g. select illumination of a subset of light guides), sequence of illumination, duration of illumination of a region or combinations thereof.

FIG. **152** is a schematic illustration of a circuit **628** of LED light source **100** in accordance with an embodiment. As shown, circuit **628** may include a controller **632** that receives input from one or more user inputs **636**, and/or one or more sensors **640** (also seen in FIG. **109**), and in response directs the mode of operation of LEDs **164**. An advantage of this design is that it allows LEDs **164** to operate responsive to environmental conditions or user inputs, which can result in better power efficiency or better user experience.

Controller **632** can be any device suitable for directing the mode of LEDs **164** responsive to input from user inputs **636** and/or sensors **640**. For example, controller **632** may include a processor or microcontroller, or may be an integrated circuit, or a logical arrangement of conductors (e.g. wires)

and other components (e.g. logic gates, transistors, etc.) that can perform the functionality described herein. Sensor **640** may be a motion sensor, or it may detect levels of sound, illumination in a room or the sound of voices,

In some embodiments, controller **632** is operable to change the level of illumination produced by LED(s) **164** in response to inputs from one or more sensor(s) **640** and/or user input(s) **636**. For example, controller **632** may be operable to vary the power delivered from the energy storage member **460** to the LED(s) **164**. The power may be varied by voltage (e.g. reducing the voltage to reduce the level of illumination) or by varying the pulse width modulation (e.g. reducing the duty cycle to reduce the level of illumination). As an example, FIGS. **153**A and **153**B exemplify a power supply circuit **628** that can be toggled between a first mode in which batteries **460** can are connected in parallel (FIG. **153**A) and a second mode in which batteries **460** are connected in series (FIG. **153**B), in response to input from sensor(s) **640**. In the series connection (FIG. **153**B), the LEDs **164** receive greater voltage and therefore generate greater illumination than in the parallel connection (FIG. **153**A). Power supply circuit **628** can be toggled between the parallel and series connection configurations by moving a switch **630** in response to input from sensor(s) (or by manual operation) between a first position (FIG. **153**A) and a second position (FIG. **153**B).

Returning to FIGS. **109** and **152**, sensor **640** can be any device that can detect an environmental condition. For example, sensor **640** may be a presence sensor, such as a sound sensor, heat sensor or a motion sensor. An advantage of this design is that it can allow controller **632** to operate LEDs **164** in a different mode (e.g. at an increased level of illumination or by turning the light source on) when sensor **640** indicates nearby human presence (e.g. detects motion or sound indicative of human presence). In the context of an artwork frame **500**, this can provide greater power efficiency where, for example controller **632** increases the level of illumination of LEDs **164** when a person is nearby to view the artwork **504**, and decreases the level of illumination of LEDs **164** (and thus conserving energy) when no one is detected nearby.

Alternatively or in addition, sensor(s) **640** may include a light sensor that can detect ambient light. For example, sensor **640** may sense the intensity and color of light shining on frame **500** (and artwork **504** by extension). In the context of artwork frame **500**, this can provide greater visibility and color accuracy to artwork **504** where, for example controller **632** changes the level of illumination and color of LEDs **164** to compliment the sensed intensity and color of light shining on frame **500**. Variations in light intensity and color may be especially prevalent where frame **500** is exposed to natural daylight.

User input **636** may be any device suitable for sensing manual user interaction. For example, user input **636** may include a switch such as a button (e.g. mechanical, resistive, or capacitive button), or slider for example. In some embodiments, user input **636** may be operatively connected to energy storage member **460** (or another power supply), and movable between a first position in which the energy storage member **460** is in a first power mode (e.g. series connected batteries) and a second position in which the energy storage member **460** is in a second power mode (e.g. parallel connected batteries).

Referring to FIG. **154**, frame **500** can include any number of sensors **640**. For example, frame **500** is shown including four spaced apart sensors **640**. Sensors **640** can be positioned anywhere on frame **500**. For example, sensors **640** may positioned at different frame corner member **540**. Referring to FIGS. **152** and **154**, sensors **640** may be light sensors that provide input to controller **632**. In response, controller **632** may direct the mode of LEDs **164**. For example, where frame **500** includes a plurality of light guides **108** (see, e.g. FIG. **139**), controller **632** may separately control power to the LEDs **164** illuminating those different light guides **108** in accordance with input from sensors **640** proximate those light guides **108**. As an example, if sunlight is shining on the top half of artwork **504** (and thus detected by the upper two sensors **640**), controller **632** may direct the LEDs **164** for the light guides that illuminate the top half of artwork **504** to reduce their level of illumination (e.g. by reducing the power level to those LEDs **164**).

Meltable Electrically Conductive Member

In accordance with another aspect of this disclosure, which may be used with one or more other aspects disclosed herein, the LEDs may be provided in a circuit such that if one LED were to fail, the remaining LEDs may continue to operate. As exemplified in FIG. **155**, each LED **164** (or grouping of LEDs **164**) may be electrically connected in parallel with energy storage member **460** (or other power source). An advantage of this design is that it allows electrical power to pass through each LED **164** independently of the other parallel connected LEDs **164**. For example, if one LED **164** was to fail, an interruption of electrical power across this failed LED **164** would not interrupt the flow of electrical power across the other parallel connected LEDs **164**.

In the illustrated embodiment, each LED **164** is electrically connected to the circuit by a meltable electrically conductive member **644**. An advantage of this design is that it can allow the LED **164** to be automatically electrically disconnected if the LED **164** fails in a way that causes the LED **164** to generate heat (e.g. due to electrical resistance of the failed LED **164**). This can help prevent the failed LED **164** from causing heat damage to the remainder of the circuit **628**, or worse causing a fire. Further, this can eliminate further power consumption by a failed LED **164**.

Meltable electrically conductive member **644** can be any electrically conductive device that melts at a temperature corresponding to a temperature of a failed LED **164** receiving the rated current of that LED **164**. For example, meltable electrically conductive member **644** may melt at a temperature above 80° C. In some examples, meltable electrically conductive member **644** may include fuse wire.

Shelving Unit or Drawer or Wall Panel or Ceiling Tile

In accordance with another aspect of this disclosure, which may be used with one or more other aspects disclosed herein, the light source may be incorporated into part of a shelving unit, drawer, wall panel or ceiling tile. The light source may use any one or more features disclosed herein.

As exemplified in FIG. **156**, a shelving unit **652** (e.g. kitchen cabinet) includes an LED light source **100**. As exemplified, LED light source **100** may be incorporated into a shelf **656** to provide lighting above, below, or both above and below the shelf **656**. In the illustrated embodiment, shelf **656** includes a light guide **108** extending horizontally within an interior of the shelf **656** and having light emitting locations **114** on both an upper surface **112**, and a lower surface **128**. An advantage of this design is that LED light source **100** can provide illumination both above and below shelf **656**.

In some embodiments, LED light source **100** defines an exterior surface of shelf **656**. For example, LED light source **100** may include an upper diffuser $\mathbf{136}_1$ defining an upper surface **660** of shelf **656**, and a lower diffuser $\mathbf{136}_2$ defining

a lower surface **664** of shelf **656**. As shown in FIG. **157**, LED light source **100** may include LEDs **164** positioned within an interior of shelf **656** and oriented to illuminate light guide end face **144**. FIG. **158** shows an example in which shelf **656** includes a recess **140** for receiving a removable cartridge **116** bearing LEDs **164**. In the illustrated example, recess **140** has an insertion opening **184** in shelf lower surface **664** for upwardly inserting cartridge **116** into recess **140**. In other embodiments, recess **140** may have a recess in shelf upper surface **660** or another shelf surface for inserting cartridge **116** downwardly or horizontally for example.

As exemplified in FIGS. **156**, **159** and **160**, shelving unit **652** may include a door **668** that is movable (e.g. sliding or hinged) between a closed position (FIG. **159**) and an open position (FIG. **160**). Moving door **668** from the closed position to the open position may activate LED light source **100** (e.g. cause LED light source **100** to illuminate). For example, shelving unit **652** may include a sensor **672** (e.g. push switch, optical encoder, infrared movement sensor, light sensor, etc.) that detects when door **668** is moved to the open position, and in response activates LED light source **100**. An advantage of this design is that it can allow LED light source **100** to reduce or cease consuming power when shelving unit door **668** is closed. As a result, electrical power consumption is reduced, and the time to failure for the LEDs of LED light source **100** may be extended.

In the illustrated example, sensor **672** is a push switch that disconnects LED light source **100** from power source **126** (which may be a power cord **552** or energy storage member **460**) when door **668** is in the closed position, and that reconnects LED light source **100** to power source **126** when door **668** is in the open position. FIGS. **161** and **162** show another example including an energy storage member **460** (e.g. batteries) as the power source that sensor **672** disconnects and reconnects to LED light source as shelving unit door **668** is closed and opened. An advantage of this design is that an electrical connection to mains power is not required allowing simpler installation, and reduced energy consumption provides prolonged battery life.

FIGS. **163** and **164** illustrate an example in which shelving unit shelf **656** is removable from shelving unit **652**. An advantage of this design is that it can allow shelf **656** to be sold independently (e.g. in standard shelf sizes) and easily inserted (e.g. retrofitted) into a shelving unit that did not before have such lighting functionality. Embodiments of shelf **656** including an internal energy storage member **460** (FIG. **161**) as a power source can make installation and shelf height adjustment very simple by avoiding any issues related to external electrical wiring.

FIG. **165-167** show an example of an LED light source **100** incorporated into the lowermost shelf **656** of shelving unit **652**. LED light source **100** may illuminate in one direction (e.g. upwards or downwards) or in two directions (e.g. upwards and downwards). In the illustrated embodiment, LED light source **100** includes an upper diffuser **136**, which may define shelf upper surface **660**, and a lower reflector **132**, such that LED light source **100** emits light upwardly into the interior of shelving unit **652** and not downwardly. FIGS. **168-169** exemplify another embodiment, in which diffuser **136** and reflector **132** are reversed so that LED light source **100** emits lights downwardly (e.g. onto a kitchen counter below). As shown, LED light source **100** may be recessed from a lower end of shelving unit **652**, which may be formed by under-cabinet molding **684** as shown. An advantage of this design is that it can help focus the light downwardly, which can mitigate shining light directly towards user's eyes. In still other embodiments, reflector **132** is replaced by a diffuser **136** so that LED light source **100** emits light both upwardly and downwardly.

As exemplified in FIGS. **170-171**, any portion of shelving unit **652** may incorporate an LED light source **100** which can be configured to illuminate inside and/or outside of shelving unit **652**. In the illustrated example, shelving unit **652** includes a front face **676** formed by LED light source **100**. Front face **676** may be part of under-cabinet molding as shown or positioned elsewhere on shelving unit **652** (e.g. part of above-cabinet molding). As exemplified, light guide **108** may extend laterally across front face **676** between a front diffuser **136** that radiates light forwardly and a rear reflector **132**.

As exemplified in FIG. **172**, a plurality of LED light sources **100** may share a common power supply **688**. An advantage of this design is that each LED light source **100** is not required to have its own independent source of power. In the illustrated example, a plurality of shelving units **652** are shown, each including at least one LED light source **100**, and one common power supply **688** which is electrically connected to all of the LED light sources **100**. Power supply **688** may be any device suitable for distributing power to the plurality of LED light sources **100**. For example, power supply **688** may include an energy storage member (e.g. batteries) and/or may be electrically connected to mains power.

In some embodiments, power supply **688** may be remotely controlled. An advantage of this design is that the electronics to control the plurality of LED light sources **100** may be centralized into one device, which can coordinate their operation. For example, power supply **688** may receive control signals by wire or wirelessly (e.g. over Bluetooth or by infrared) from a control device such as a smartphone, a remote control, or a wall mounted control panel. The control signals may direct power supply **688** to vary the illumination intensity or color of the LED light sources **100** individually or as a group.

As exemplified in FIG. **173**, a drawer **692** may include an LED light source **100**. LED light source **100** may be incorporated into any one or more of the bottom wall **696**, or side walls **704** of drawer **692**. An advantage of this design is that it can provide illumination into a drawer which may be in shadow relative to the light source in the room. In the illustrated example, LED light source **100** includes a light guide **108** (and optionally a front diffuser and rear reflector) incorporated into each of the four side walls **704**.

As exemplified in FIGS. **174** and **175**, a shelving unit **652** may include an LED light source **100** incorporated into the shelving unit doors **668**. An advantage of this design is that it can provide additional illumination to open drawers **692**, to objects withdrawn from the shelving unit **652** (e.g. clothing), and to the user using the objects withdrawn from the shelving unit **652** (e.g. the user trying on clothing). As shown, LED light source **100** emits light from an inside face **712** of shelving unit door **668**. In the illustrated example, shelving unit **652** is shown including a shelving unit sensor **672** that can activate LED light source **100** in response to sensing that shelving unit doors **668** are open.

As exemplified in FIGS. **176** and **177**, the LED light source **100** shown may form or be incorporated into a wall panel or ceiling tile. As shown, LED light source **100** includes a light guide **108** and diffuser **136** which are held spaced apart by a plurality of longitudinally spaced apart spacers **716**. An advantage of this design is that spacers **716** can support loads applied to diffuser **136** (e.g. weight of a

standing person) to hold diffuser **136** spaced apart from light guide light emitting face **112**.

Spacers **716** may be integrally formed with light guide **108** as shown, or discrete components that are positioned between light emitting face **112** and diffuser **136**. In some embodiments, spacers **716** and diffuser **136** may include mating mechanical or locking connectors **720**. An advantage of this design is that it can make it easy to assemble diffuser **136** with spacers **716**. In some embodiments, mechanical connectors **720** may be removably connectable. This can allow diffuser **136** to be removed, such as to access light guide **108** for repair or replacement. In the illustrated embodiment, mechanical connectors **720** include male connectors $\mathbf{720}_1$ which are securely receivable in female connectors $\mathbf{720}_2$.

In the illustrated embodiment, housing **104** surrounds light guide **108** (including light emitting face **112**) and diffuser **136**. In some embodiments, housing **104** is sealed to diffuser **136** to inhibit the passage of liquid and dirt. An advantage of this design is that it can allow LED light source **100** to be used outdoors. FIG. **176** shows an example of LED light source **100** having a reflector **132** and one light emitting face **112**. FIG. **177** shows an example of LED light source **100** having no reflector and two light emitting faces **112** and **128**. As shown in FIG. **177**, spacers **716** may be spaced apart and longitudinally distributed between light emitting face **112** and diffuser $\mathbf{136}_1$, and between light emitting face **128** and diffuser $\mathbf{136}_2$.

Floor Tile, Window Frame, Stair Case and Closet, Floor Mat

In accordance with another aspect of this disclosure, which may be used with one or more other aspects disclosed herein, the light source may be incorporated into part or all of a floor tile or window frame or s stair case or closet or floor tile. The light source may use any one or more features disclosed herein.

Reference is now made to FIGS. **178-179**. As shown, LED light source **100** (e.g. as shown and described with respect to FIG. **176**) may be formed as or incorporated into a floor tile **722** for an indoor or outdoor walkway **728**. In the illustrated example, walkway **728** includes a plurality of floor tiles **722** incorporating LED light source **100**, and a plurality of traditional floor tiles **724** (e.g. absent any lighting function).

In some embodiments, floor tile **722** may include a mounting member **732** that helps to join the floor tile **722** to adjacent floor tiles **722** or **724**, and/or to the mounting substrate (e.g. dirt, gravel, or mortar). As shown, floor tile **722** may include one or more fasteners **736** that join diffuser **136** to housing **104**, and which can be selectively released to remove diffuser **136**, such as to access light guide **108** or other components of LED light source **100** within housing **104**. Floor tiles **722** may be powered in any manner disclosed herein. In the illustrated embodiment, floor tiles **722** are electrically connected to each other, and receive electrical power from a solar panel **476**.

As exemplified in FIGS. **180-182** window frame **744** is similar to frame **500** shown and described elsewhere in the application, except for example that window frame **744** holds a window pane **748** instead of artwork and a backing layer. As shown, window frame **744** includes frame side panels **508** that surround a frame inner opening **512** and hold a window pane **748**. LED light source **100** may be incorporated into any one or more (or all) of frame side panels **508**. Window frame **744** may be powered in any manner disclosed herein. In the illustrated embodiment, window frame **744** includes solar panels **476** that are electrically connected to LED light source **100** for providing power to the same. Window frame **744** may be part of any structure, such as a garage door **752** as shown, or a fixed building structure (e.g. a wall).

As exemplified in FIGS. **183-184**, doorway **756** may include a door **760** and a door frame **764**. As shown, door frame **764** may include an LED light source **100**. An advantage of this design is that door frame **764** can provide illumination to the area near door frame **764**. For example, door frame **764** may provide some initial illumination to a dark room on the opposite side of door **760**, which can make finding and activating a light switch for the dark room easier and safer. Door frame **764** includes one or more frame side panels **508** which collectively define a frame inner opening **512** for door **760**. In the illustrated example, door frame **764** includes two vertical frame side panels $\mathbf{508}_1$ connected at their upper ends **768** by a horizontal frame side panel $\mathbf{580}_2$.

LED light source **100** may form or be incorporated into any one or more of frame side panels **508**, which can provide illumination in any direction(s). For example, LED light source **100** may provide illumination through any one or more (or all) of the front face **772**, outer face **776**, and inner face **780** of frame side panel **508**. In the illustrated embodiment, LED light source **100** includes a light guide **108** having a light guide light emitting face **112** oriented to emit light inwardly towards a diffuser **136** which defines frame side panel inner face **772**, which borders frame inner opening **512**.

As exemplified in FIGS. **185-186**, a staircase **784** in accordance is provided. As shown, staircase **784** may include an LED light source **100**. For example, LED light source **100** may form or be incorporated into any one or more (or all) of stair risers **788** and stair treads **792** of staircase **784**. An advantage of this design is that it can provide illumination (e.g. at night) for a user climbing or descending staircase **784**. In the illustrated example, LED light source **100** includes a light guide **108** having a light guide light emitting face **112** oriented to emit light forwardly towards a diffuser **136** which defines riser front surface **796**.

As exemplified in FIG. **187**, closet **804**, closet **804** may include a shelf **656** formed by or incorporating an LED light source **100**. An advantage of this design is that shelf **656** can provide illumination to an interior of closet **804**, which may be shadowed from the light source in the room when accessed by a user. In the illustrated embodiment, shelf **656** is positioned above (i.e. at a higher elevation) than closet rod **808**. Shelf **656** may be mounted in positioned to one or more (or all) of closet rear wall **812** and closet side walls **816**.

As exemplified in FIG. **188**, closet **804** may include an illuminated closet rod **808**. Closet rod **808** may be formed by or incorporate an LED light source **100** as shown. For example, light guide **108** may be formed as a rod. An advantage of this design is that it provides a light emitting face **112** facing many or all directions at once (e.g. 360 degree coverage). In the illustrated embodiment, light guide **108** is formed in the shape of a cylindrical rod having a circularly curved light emitting face **112**. In other embodiments, light guide **108** may be formed in the shape of a rod having a different cross-section, such as triangular, rectangular, or another regular or irregular cross-sectional shape. As shown, diffuser **136** may be shaped as a hollow tube which surrounds light guide **108**. Similar to light guide **108**, diffuser **136** may have any cross-sectional shape, such as a circular, triangular, rectangular, or other regular or irregular cross-sectional shape.

As exemplified in FIGS. **189-191**, floor mat **820** may include an LED light source **100** that shines light upwardly, and a power supply **688** that supplies power to the LED light

source **100**. An advantage of this design is that floor mat **820** can provide visibility to a user walking over or near the floor mat **820**, such as in a dark bathroom or hallway at night. As shown, diffuser **136** may have an outer surface **824** that provides a supporting surface for a user to walk over.

In some embodiments, floor mat **820** may be flexible. For example, floor mat **820** may be at least sufficiently flexible to roll into a tubular configuration. An advantage of this design is that it can allow floor mat **820** to take on a more compact configuration for easier shipping or storage. As shown, light guide **108** may be composed of a thin flexible material such as polycarbonate having a thickness of 0.0625 in to 0.125 in.

Diffuser

In some embodiments, diffuser **136** may include a plurality of discrete projections **828** from light guide **108**. Diffuser projections **828** may be arranged side-by-side overlaying light guide **108** according to any pattern. In the illustrated example, diffuser projections **828** are arranged in a grid pattern. Diffuser **136** can include any number of projections **828**. For example, diffuser **136** may include 10 or more projections **828**. In the illustrated embodiment, diffuser **136** includes 65 projections. As shown, diffuser projections **828** may angle away from each other when floor mat **820** is rolled into a tubular configuration. An advantage of this design is that it reduces tensile stress on the diffuser **136** when floor mat **820** is rolled.

Diffuser projections **828** can be made of any material suitable for walking over. In some embodiments, projections **828** are made of an elastomeric material, such as silicone. An advantage of this design is that it may be more comfortable for walking over, and may be able to resiliently accommodate deformations (e.g. stretching) caused by rolling floor mat **820**.

Food Container

In accordance with another aspect of this disclosure, which may be used with one or more other aspects disclosed herein, the light source may be incorporated into a food container.

Reference is now made to FIG. **192**, which shows a food container **832** supported on a supporting member **836**. Food container **832** may be any article made to support food or drink, such as a cup, a bowl, or a plate for example. Supporting member **836** may be any article made to support food container **832**, such as a counter tabletop, a serving tray, or a coaster. As shown, supporting member **836** may be formed by or incorporate an LED light source **100** that shines light towards food container **832**. Further, food container **832** may function as a light guide, being composed of at least translucent material which conducts light from LED light source **100** through internal reflection, and including light emitting locations **114** associated with an exterior light emitting face **112** which shines light outwardly. An advantage of this design is that it allows food container **832** to shine light without having to incorporate a light source (e.g. LEDs **164**) into the food container **832**. Instead, LED light source **100** is incorporated into supporting member **836**, which can allow food container **832** to be made dishwasher safe for example.

Art Display

In accordance with another aspect of this disclosure, which may be used with one or more other aspects disclosed herein, the light source may be incorporated into an art supply.

Reference is now made to FIGS. **193-194**, which show an art display **840** which illuminates a supported artwork **844**. Artwork **844** may be a three-dimensional artwork, such as a statue, a figurine, a trophy, a framed image, or any other object a user may wish to display and illuminate. As shown, art display **840** may include a base **848** formed by or incorporating an LED light source $\mathbf{100}_1$ and an overhead LED light source $\mathbf{100}_2$. The base **848** includes an upper surface **852** that supports artwork **844**. An advantage of this design is that it can illuminate an artwork **844** from multiple directions. LED light source $\mathbf{100}_1$ may shine light upwardly from base upper surface **852** to illuminate artwork **844** from below. LED light source $\mathbf{100}_2$ may shine light downwardly to illuminate artwork **844** from above.

Furniture

In accordance with another aspect of this disclosure, which may be used with one or more other aspects disclosed herein, the light source may be incorporated into a furniture.

Reference is now made to FIGS. **195-196** which show furniture **856** in accordance with an embodiment. Furniture **856** may be any type of furniture, such as a chair as shown, a stool, a couch, a table (FIGS. **198-199**), a desk, or a bed for example. Furniture **856** can incorporate an LED light source **100** to provide illumination from one or more furniture portions **860**. An advantage of this design is that it can improve the visibility of the furniture **856** and/or the furniture surroundings, such as in the dark or low lighting conditions. Chair **856** includes a seat **864** supported on legs **868**, and a backrest **872** extending upwardly from seat **864**.

Any one or more of seat **864**, legs **868**, and backrest **872** may be an illuminated portion **860**. In the illustrated embodiment, chair backrest **872** is an illuminated portion **860**. Chair backrest **872** includes an illuminated light guide **108**. Light guide **108** may be configured to illuminate in any direction, such as forwardly towards a seated user as shown, rearwardly, or both. In the example shown, LED light source **100** includes a diffuser **136** which forms a front surface **876** of chair backrest **872**, and light guide **108** extends in a plane parallel to backrest front surface **876**.

FIG. **197** shows another embodiment of chair **856** in which seat **864** is another illuminated portion **860**. As shown, chair seat **864** includes an illuminated light guide $\mathbf{108}_2$. Light guide $\mathbf{108}_2$ may be configured to illuminate in any direction, such as downwardly towards the ground as shown, upwardly towards a seated user, or both. In the example shown, LED light source **100** includes a diffuser $\mathbf{136}_2$ which forms a lower surface **880** of chair seat **864**, and light guide $\mathbf{108}_2$ extends in a plane parallel to seat lower surface **880**.

FIGS. **198-199** show another example of furniture **856** incorporating an LED light source **100**. In this example, furniture **856** is a table having legs **868** and a tabletop **884**. As shown, tabletop **884** may be an illuminated portion **860** of table **856**. In the example shown, tabletop **884** includes an illuminated light guide **108**. Light guide **108** may be configured to illuminate in any direction, such as upwardly as shown, downwardly towards the ground, or both. In the example shown, LED light source **100** includes a diffuser **136** which forms an upper surface **888** of tabletop **884**, and light guide **108** extends in a plane parallel to tabletop upper surface **888**.

Returning to FIG. **195**, LED light source **100** can be powered in any suitable manner, including any manner disclosed herein. In the illustrated example, furniture **856** includes a solar panel **476** and an energy storage member **460**, which are electrically connected to LED light source **100** to supply power to the same. In some embodiments, solar panel **476** may operate to charge energy storage member **460**. In other embodiments, solar panel **476** may supplement or replace energy storage member **460** as the

power source of LED light source **100** when there is sufficient solar energy, and energy storage member **460** may be the sole supply of power to LED light source **100** when solar panel **476** generates insufficient power.

Solar panel **476** and energy storage member **460** may be attached to or incorporated into any portion of furniture **856**. In the illustrated embodiment, solar panel **476** has a light collection face **892** positioned to form an upper surface **896** of chair backrest **872**, and energy storage member **460** is positioned within one of chair legs **868**. An advantage of this design is that it avoids adding bulk to chair **856**.

Bicycle and Helmut

In accordance with another aspect of this disclosure, which may be used with one or more other aspects disclosed herein, the light source may be incorporated into a bicycle and/or a helmet.

As exemplified in FIGS. **200-201**, bicycle **900** may include a frame **908**, and a seat **912**, wheels **916**, and handlebars **920** mounted to frame **908**. LED light source **100** may have a tubular configuration that can be mounted to any one or more of frame **908**, seat **912**, wheels **916**, and handlebars **920** to provide outward illumination. An advantage of this design is that it can improve the visibility of bicycle **900** to motorists, which can make bicycle **900** safer to ride, especially at night.

In the illustrated example, LED light source **100** is mounted to handlebars **920**. As shown, LED light source **100** (including light guide **108** and optionally a diffuser **136**) may surround a portion of handlebars **920** in cross-section, and have an outward light emitting direction **120**. To facilitate mounting, LED light source **100** may include two or more parts **924** which are movable (e.g. separable) to allow LED light source **100** to open and enclose around handlebars **920**. In the illustrated embodiment, LED light source **100** includes two parts **924** which are removably connected by mechanical connectors **720**, as shown. In other embodiments, LED light source **100** may include three or more parts **924**. Alternatively, LED light source **100** may have a single part **924** with a seam **928**, and which is sufficiently resiliently flexible to allow the seam **928** to be temporarily widened enough to insert or remove handlebars **920**.

LED light source **100** can have a tubular shape that defines an inner opening **932** having any cross-sectional shape. For example, the cross-sectional shape of inner opening **932** may be circular as shown in FIG. **201**, triangular, square, hexagonal, or another regular or irregular shape. FIGS. **202-203** illustrate an embodiment in which LED light source **100** has an inner opening **932** with a substantially square shape to accommodate a substantially square cross-section of bicycle frame **908**.

LED light source **100** can be powered in any suitable manner, including any manner disclosed herein. FIG. **201** illustrates an example including an energy storage member **460**. FIGS. **202-203** illustrate an example including an energy generating member **476**. As shown, energy generating member **476** may be connected to rear wheel **916** to generate power from the rotation of rear wheel **916**. An advantage of this design is that it can provide power to illuminate LED light source **100** whenever bicycle **900** is in motion, which may account for the most critical moments to have illumination.

As exemplified in FIGS. **204-205**, a helmet **934** may be any suitable type of helmet, such as a bicycle helmet as shown, a motorcycle helmet, or a ski helmet for example. Helmet **934** may include an LED light source **100** which provides illumination to one or more illuminated portions **936**. An advantage of this design is that it can provide helmet **934** with greater visibility to others (e.g. motorists, skiers) which can provide additional safety to the wearer. Depending on the light emitting direction and brightness, LED light source **100** may also be effective for illuminating the wearer's surroundings for enhanced visibility by the wearer.

In the illustrated example, helmet **934** includes an illuminated portion **936** at rear end **944**. This can make helmet **934** highly visible to others (e.g. motorists) behind the wearer. As shown, a light guide **108** may be incorporated into helmet **934** with a rearward light emitting direction **120**.

Alternatively or in addition, helmet **934** may include an illumination portion at front end **948**. This can allow helmet **934** to illuminate the environment ahead of the wearer.

While the above description provides examples of the embodiments, it will be appreciated that some features and/or functions of the described embodiments are susceptible to modification without departing from the spirit and principles of operation of the described embodiments. Accordingly, what has been described above has been intended to be illustrative of the invention and non-limiting and it will be understood by persons skilled in the art that other variants and modifications may be made without departing from the scope of the invention as defined in the claims appended hereto. The scope of the claims should not be limited by the preferred embodiments and examples, but should be given the broadest interpretation consistent with the description as a whole.

The invention claimed is:

**1**. A frame for a work of art comprises at least one side panel extending around a perimeter and defining an inner opening in which the work of art is displayable, the at least one side panel comprising a longitudinally extending light guide having a longitudinally extending light emitting face that faces inwards towards another portion of the at least one side panel, the longitudinally extending light emitting face having a length, a first end face and a longitudinally spaced apart second end face and an LED light source is provided at least at the first end face, wherein the light emitting face has a plurality of light emitting locations provided thereon, wherein the density of the light emitting locations increases from the first end face towards the second end face.

**2**. The frame of claim **1** wherein the fame is in the shape of a parallelogram and comprises four side panels, each of which comprises a longitudinally extending light guide having a light emitting face that faces onwards.

**3**. The frame of claim **2** wherein each light emitting face has an inner side positioned proximate a plane in which the work of art seats when mounted in the frame and a spaced apart outer side and the inner side is position forward of the plane.

**4**. The frame of claim **1** wherein the light emitting face has an inner side positioned proximate a plane in which the work of art seats when mounted in the frame and a spaced apart outer side and the inner side is position forward of the plane.

**5**. The frame of claim **1** wherein a first LED light source is provided at the first end face and a second LED light source is provided at the second end face wherein the density of the light emitting locations increases from each of the first end face and the second end face to a middle of the light emitting face.

**6**. The frame of claim **1** wherein the LED light source is provided only at the first end face wherein the density of the light emitting locations increases from the first end face to the second end face.

* * * * *